MINUTE ITEM
This Calendar Item No. 13
was approved as Minute Item
No. 13 by the State Lands
Commission by a vote of 3
0 at its 10/26/89
meeting.

CALENDAR ITEM

13

A 7

S 1

10/26/89
W 24256 PRC 7354
J. Ludlow

APPROVAL OF A RECREATIONAL PIER PERMIT

APPLICANT: Moana Beach Property Owners Association, Inc.
P.O. Box 109
Homewood, California 95718

AREA, TYPE LAND AND LOCATION:
A submerged parcel of land located in McKinney Bay, Lake Tahoe, Placer County.

LAND USE: Partial reconstruction of and a 30-foot extension to an existing multi-use pier.

TERMS OF PROPOSED PERMIT:
Initial period: Five-years beginning October 26 1989.

CONSIDERATION: Rent-free, pursuant to Section 6503.5 of the P.R.C.

BASIS FOR CONSIDERATION:
Pursuant to 2 Cal. Code Regs. 2003.

APPLICANT STATUS:
Applicant is owner of upland.

PREREQUISITE CONDITIONS, FEES AND EXPENSES:
Filing fee and processing costs have been received.

STATUTORY AND OTHER REFERENCES:

A. P.R.C.: Div. 6, Parts 1 and 2; Div. 13.

B. Cal. Code Regs.: Title 2, Div. 3; Title 14, Div. 6.

AB 884: 11/13/89.

OTHER PERTINENT INFORMATION:

1. Pursuant to the Commission's delegation of authority and the State CEQA Guidelines (14 Cal. Code Regs. 15025), the staff has prepared a Proposed Negative Declaration identified as EIR ND 462, State Clearinghouse No. 89030601. Such Proposed Negative Declaration was prepared and circulated for public review pursuant to the provisions of CEQA.

   Based upon the Initial Study, the Proposed Negative Declaration, and the comments received in response thereto, there is no substantial evidence that the project will have a significant effect on the environment. (14 Cal. Code Regs. 15074(b))

2. This activity involves lands identified as possessing significant environmental values pursuant to P.R.C. 6370, et seq. Based upon the staff's consultation with the persons nominating such lands and through the CEQA review process, it is the staff's opinion that the project, as proposed, is consistent with its use classification.

3. The Applicant has revised the application to include only the partial reconstruction and extension of the existing pier. All work will be conducted waterward of the 6,223-foot low water line and will be accomplished from a barge with a pile driver. All construction wastes will be collected onto the barge and disposed of at the nearest dumpster/sanitary landfill site.

4. Materials will be neither stored nor placed above the low waterline of the subject property. This procedure will prevent any disturbance to what may be considered a Tahoe Yellow Cress (Rorippa) habitat.

5. The proposed project has been reviewed under the consultation process established between the Commission and the Department of Fish and Game, pursuant to the provisions of the California Endangered Species Act (CESA), and it has been determined that the project, as described herein, poses no jeopardy to the Tahoe Yellow Cress (Rorripa) or its habitat.

6. In order to determine the other potential trust uses in the area of the proposed project, the staff contacted representatives of the following agencies: TRPA, Department of Fish and Game, County of Placer, and the Tahoe Conservancy. None of these agencies expressed a concern that the proposed project would have a significant effect on trust uses in the area. The agencies did not identify any trust needs which were not being met by existing facilities in the area. Identified trust uses in this area would include swimming, boating, walking along the beach, and views of the lake.

   This property was physically inspected by staff for purposes of evaluating the impact on the public trust.

7. All permits issued at Lake Tahoe include special language in which the permittee/lessee agrees to protect and replace or restore, if required, the habitat of Rorippa subumbellata, commonly called the Tahoe Yellow Cress, a State-listed endangered plant species.

8. All applicants at Lake Tahoe will be notified that the public has a right to pass along the shoreline and the permittee must provide a reasonable means for public passage along the shorezone area occupied by the permitted structure.

9. All permits covering structures in Lake Tahoe will include a condition subsequent that if any structure authorized is found to be in nonconformance with the Tahoe Regional Planning Agency's shorezone ordinance and if any alterations, repairs, or removal required pursuant to said ordinance are not accomplished within the designated time period, then the permit will be automatically terminated, effective upon notice by the State, and the site shall be cleared pursuant to the terms thereof.

APPROVALS OBTAINED:

Department of Fish and Game, Lahontan Regional Water Quality Control Board, Placer County, and Tahoe Regional Planning Agency.

FURTHER APPROVALS REQUIRED:

United States Army Corps of Engineers.

EXHIBITS:

A. Land Description.
B. Location Map.
C. Placer County Letter of Approval.
D. Negative Declaration.

IT IS RECOMMENDED THAT THE COMMISSION:

1. CERTIFY THAT A NEGATIVE DECLARATION, EIR ND 462, STATE CLEARINGHOUSE NO. 89030601 WAS PREPARED FOR THIS PROJECT PURSUANT TO THE PROVISIONS OF THE CEQA AND THAT THE COMMISSION HAS REVIEWED AND CONSIDERED THE INFORMATION CONTAINED THEREIN.

2. DETERMINE THAT THE PROJECT, AS APPROVED, WILL NOT HAVE A SIGNIFICANT EFFECT ON THE ENVIRONMENT.

3. AUTHORIZE ISSUANCE TO MOANA BEACH PROPERTY OWNERS ASSOCIATION, INC. OF A FIVE-YEAR RECREATIONAL PIER PERMIT, BEGINNING OCTOBER 26, 1989; FOR THE PARTIAL RECONSTRUCTION OF AND A 30-FOOT EXTENSION TO AN EXISTING MULTI-USE PIER ON THE LAND DESCRIBED ON EXHIBIT "A" ATTACHED AND BY REFERENCE MADE A PART HEREOF.

Prepared by Judy Ludlow on 9/27/89

LAND DESCRIPTION
EXHIBIT "A"

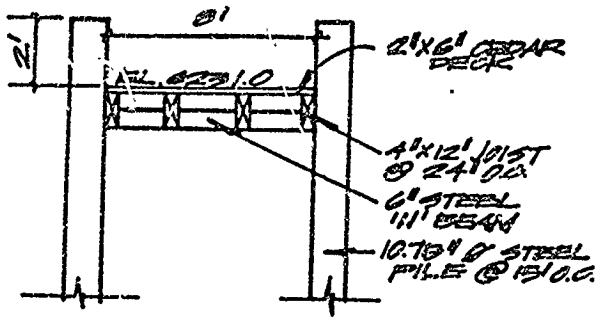

WALKWAY SECTION

LOCATION MAP

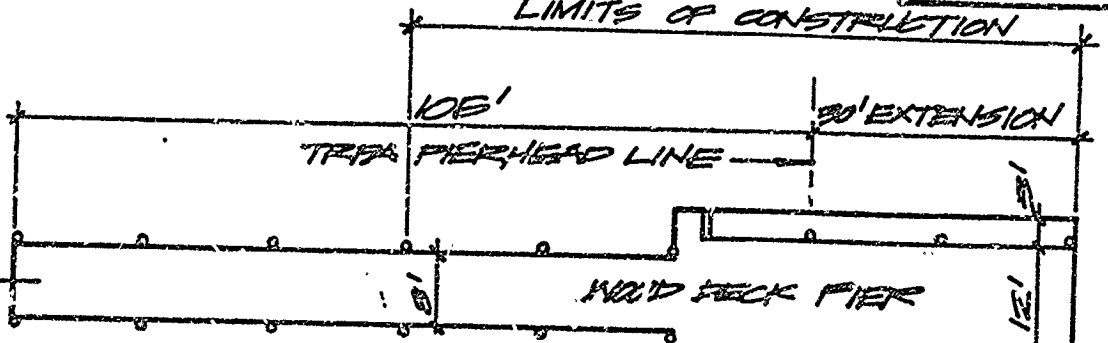

PLAN

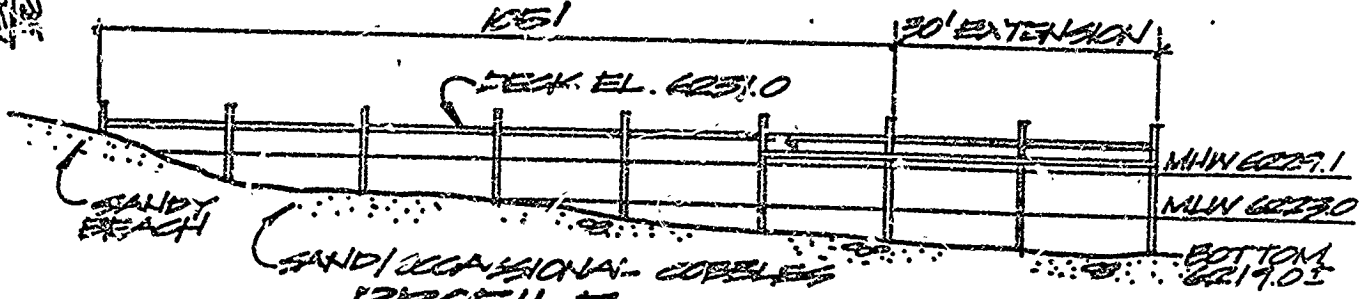

PROFILE

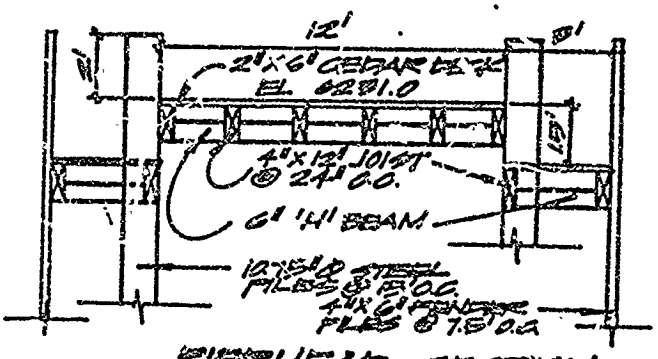

PIERHEAD SECTION

EXIST. PIER REPAIR AND EXTENSION
MOANA BEACH FOR
MOANA CIRCLE
PLACER COUNTY
APN: 98-191-11
OCTOBER 1989

CALENDAR PAGE 65
MINUTE PAGE 3783

RAYMOND VAIL AND ASSOCIATES
ENGINEERING • PLANNING • ARCHITECTURE • SURVEYING

ADJOINING PROPERTIES
NORTH 98-330-15
SOUTH 98-191-12

REVISED 9/89

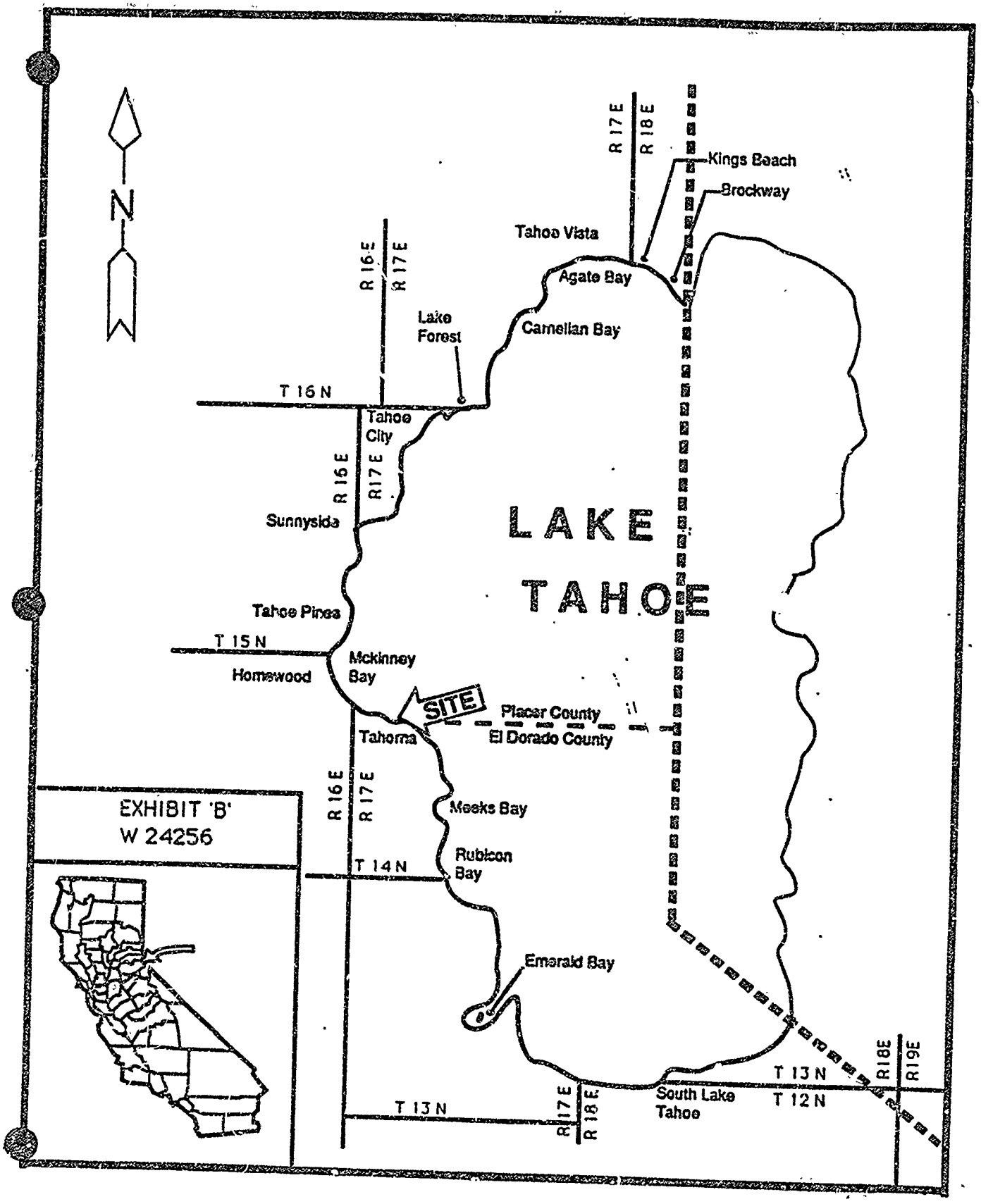

CALENDAR PAGE	66
MINUTE PAGE	3739

EXHIBIT "C"

W 24256

PLACER COUNTY

DEPARTMENT OF PUBLIC WORKS

JACK WARREN, Director
JAN WITTER, Assistant Director
LARRY ODDO, Deputy Director
ALAN ROY, Deputy Director

OPERATING DIVISION
Administration
Engineering
Equipment Maintenance
Road Maintenance
Special Districts
Surveying
Transportation

January 6, 1989

Judy Ludlow
State Lands Commission
1807-13th Street
Sacramento, cA 95814

RE: **PIER/SHORE ZONE CONSTRUCTION**

The County of Placer has reviewed the below referenced requests for construction activities within the shore zone of Lake Tahoe. We have no objection to the construction activities described in these applications contingent upon approval by your office.

1.	Dale Hanson	APN 85-260-33	W24248
2.	Joseph Harris	APN 116-220-49	W24235
3.	Moana Beach P.O.A.	APN 98-191-11	W24256
4.	John Mozart	APN 98-010-03	PRC6525.9
5.	Reid Dennis	APN 83-162-12	W20953
6.	Fred Damavandi	APN 116-080-04	W24138

If you have any questions, please give me a call at your convenience.

COUNTY OF PLACER
DEPARTMENT OF PUBLIC WORKS
JACK WARREN, DIRECTOR

JAMES A. MCLEOD
ASSISTANT CIVIL ENGINEER

JAM:ms

CALENDAR PAGE 67
MINUTE PAGE 3799

11444 B Avenue / DeWitt Center / Auburn, California 95603 / (916) 823-4511

STATE OF CALIFORNIA--STATE LANDS COMMISSION
STATE LANDS COMMISSION
1807 13TH STREET
SACRAMENTO, CALIFORNIA 95814

EXHIBIT "D"

GEORGE DEUKMEJIAN, Governor

W 24256

89030601

PROPOSED NEGATIVE DECLARATION

EIR ND 462

File Ref.: W 24256

SCH#:

Project Title: MOANA BEACH PIER EXTENSION AND RECONSTRUCTION

Project Proponent: Moana Beach Property Owners Association, Inc.

Project Location: In Lake Tahoe adjacent to Moana Beach Circle, McKinney Bay, El Dorado County.

Project Description: Extension and reconstruction of an existing pier.

Contact Person: TED T. FUKUSHIMA Telephone: (916)322-7813

This document is prepared pursuant to the requirements of the California Environmental Quality Act (Section 21000 et seq., Public Resources Code), the State CEQA Guidelines (Section 15000 et seq., Title 14, California Code Regulations), and the State Lands Commission regulations (Section 2901 et seq., Title 2, California Code Regulations).

Based upon the attached Initial Study, it has been found that:

[X] the project will not have a significant effect on the environment.

[ ] mitigation measures included in the project will avoid potentially significant effects.

CALENDAR PAGE	68
MINUTE PAGE	3791

Form 13.17 (2/89)

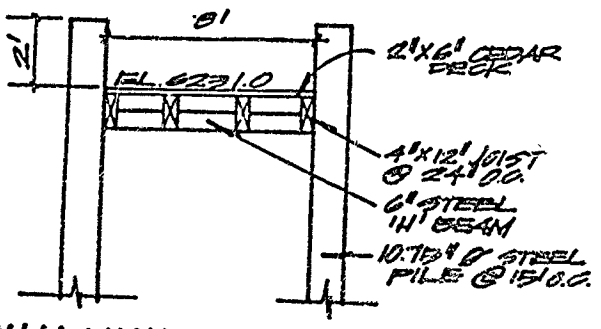

WALKWAY SECTION

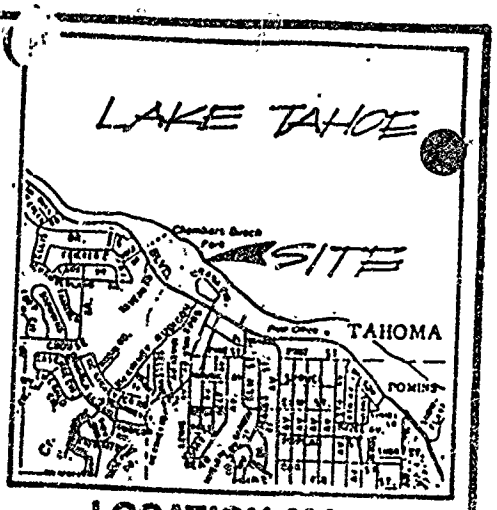

LOCATION MAP

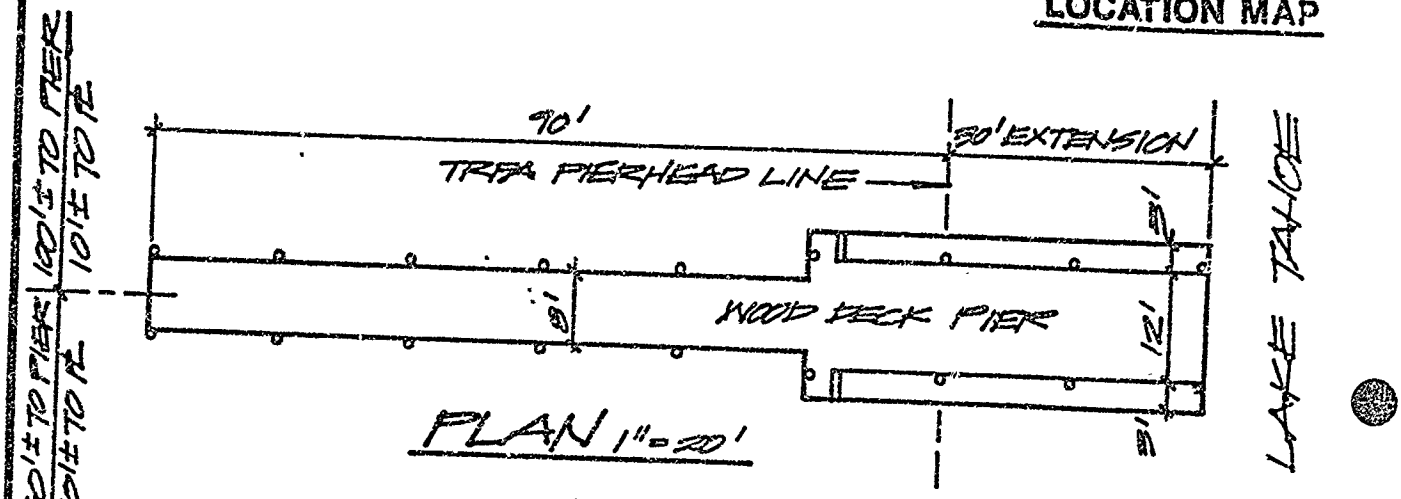

PLAN 1"=20'

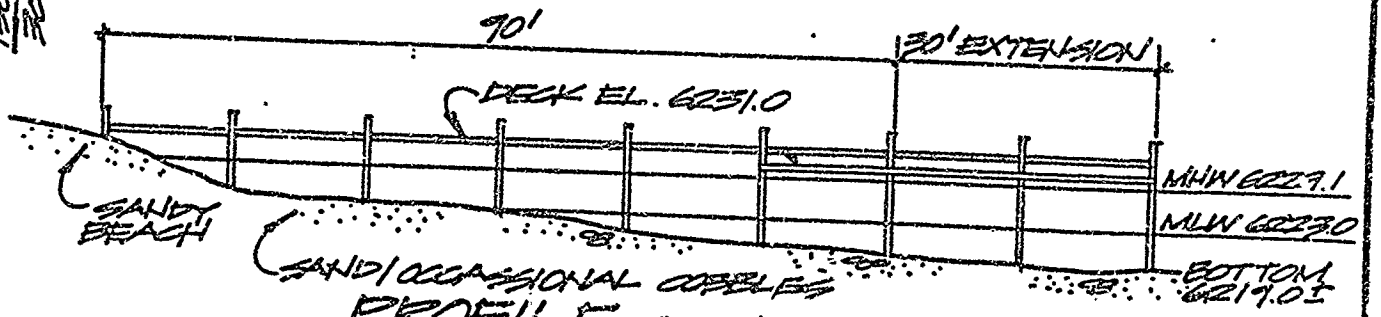

PROFILE 1"=20'

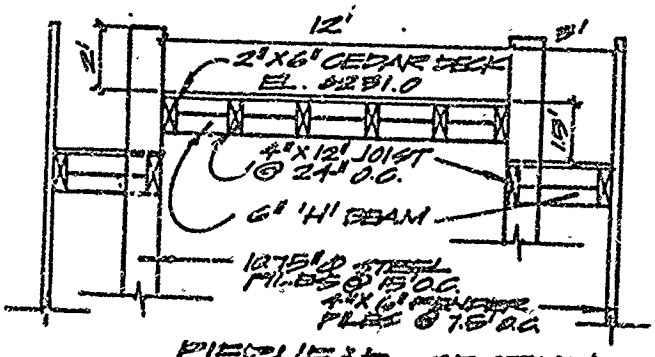

PIERHEAD SECTION

EXIST. PIER REPAIR AND EXTENSION
MOANA BEACH FOR
MOANA CIRCLE
EL DORADO COUNTY, CA
APN: 98-191-11
OCTOBER 1988

ADJOINING PROPERTIES
NORTH 98-330-15
SOUTH 98-191-12

REVISED

CALENDAR PAGE 69
MINUTE PAGE 3730

RAYMOND VAIL AND ASSOCIATES
ENGINEERING • PLANNING • ARCHITECTURE • SURVEYING

W.O. 7125.31S
December 7, 1988

RE: PIER RECONSTRUCTION/EXTENSION - MOANA BEACH POA
PLACER COUNTY APN: 98-191-11

PROJECT NARRATIVE

Reconstruction/extension of an existing multiple-use pier with 10.75" diameter steel piles at 15' O.C. 6" steel "H" beams, 4" x 10" wood joists at 24" O. C., 2" x 6" min. cedar deck, with catwalks. Extend to provide necessary water depth (lake bottom 6219.0) Existing sundeck to be removed in lieu of extension to make pier conforming to current building codes. (See submittal drawing.)

CONSTRUCTION METHOD

Reconstruction/extension of existing pier is to be by barge with pile driver; cassions or sleeve will be used when sediment is resuspended while pile driving. Anchorage of barge will be to existing structure and/or anchors required for adequate stabilization of barge on the lake. All construction wastes will be collected onto barge and/or onshore dumpster and disposed at the nearest dumpster/sanitary landfill site. Small boats (John boats) and tarps to be under construction areas to provide collection of construction debris preventing any discharge of wastes to the lake.

CALENDAR PAGE 70
MINUTE PAGE 3723

STATE LANDS COMMISSION

Date Filed: 2 27 89

File Ref.: W 24256

ENVIRONMENTAL IMPACT ASSESSMENT FORM -- Part I

(To be completed by applicant)

FORM 69.3(11/82)

A. GENERAL INFORMATION

1. Name, address, and telephone number:

a. Applicant

Moana Beach Property Owners Association, Inc.

P.O. Box 109

Homewood, CA 95718

( )

b. Contact person if other than applicant:

( )

2. a. Project location: (Please reference to nearest town or community and include county)

In Lake Tahoe adjacent to Moana Beach Circle, McKinney Bay, El Dorado County.

b. Assessor's parcel number: 98-191-11

3. Existing zoning of project site:

4. Existing land use of project site: pier

5. Proposed use of site: same; extension and reconstruction.

6. Other permits required: Tahoe Regional Planning Agency; El Dorado County

B. PROJECT DESCRIPTION

1. For building construction projects, complete "ATTACHMENT A".

2. For non-building construction projects: Describe fully, the proposed activity, its purpose and intended use, e.g. for proposed mineral prospecting permits, include the number of test holes, size of holes, amount of material to be excavated, maximum surface area of disturbance, hole locations, depth of holes, etc. Attach plans or other drawings as necessary.

CALENDAR PAGE 71

MINUTE PAGE 3101

C. ENVIRONMENTAL SETTING

1. Describe the project site as it exists before the project, including information on topography, soil stability, plants and animals, and any cultural, historical, or scenic aspects. Describe any existing structures on the site, and the use of the structures.

2. Describe the surrounding properties, including information on plants and animals and any cultural, historical, or scenic aspects. Indicate the type of land use (residential, commercial, etc.), intensity of land use (one-family, apartment houses, shops, department stores, etc.), and scale of development (height, frontage, set-back, rear yard, etc.).

D. ENVIRONMENTAL IMPACT ASSESSMENT

Answer the following questions by placing a check in the appropriate box. Discuss all items checked "yes" or "maybe". (Attach additional sheets as necessary)

Will the project involve:	YES	MAYBE	NO
1. a change in existing features of any bays, tidelands, beaches, lakes, or hills, or substantial alteration of ground contours?	☐	☐	☒
2. a change in scenic views or vistas from existing residential areas or public lands or roads?	☐	☐	☒
3. a change in pattern, scale, or character of the general area of project?	☐	☐	☒
4. a significant effect on plant or animal life?	☐	☐	☒
5. significant amounts of solid waste or litter?	☐	☐	☒
6. a change in dust, ash, smoke, fumes, or odors in the vicinity?	☐	☐	☒
7. a change in ocean, bay, lake, stream, or ground water quality or quantity, or alteration of existing drainage patterns?	☐	☐	☒
8. a change in existing noise or vibration levels in the vicinity?	☐	☐	☒
9. construction on filled land or on slope of 10 percent or more?	☐	☐	☒
10. use or disposal of potentially hazardous materials, such as toxic or radioactive substances, flammables, or explosives?	☐	☐	☒
11. a change in demand for municipal services (police, fire, water, sewage, etc.)?	☐	☐	☒
12. an increase in fossil fuel consumption (electricity, oil, natural gas, etc.)?	☐	☐	☒
13. a larger project or a series of projects?	☐	☐	☒

E. CERTIFICATION

I hereby certify that the statements furnished above and in the attached exhibits present the data and information required for this initial evaluation to the best of my ability, and that the facts, statements, and information presented are true and correct to the best of my knowledge and belief.

Date: 2/27/89 Signed: [illegible]

CALENDAR PAGE 72
MINUTE PAGE 3765

STATE LANDS COMMISSION

ENVIRONMENTAL IMPACT ASSESSMENT CHECKLIST – PART II

Form 13.20 (7/82)

File Ref.: W 24256

I. BACKGROUND INFORMATION

A. Applicant: Moana Beach Property Owners Association, Inc.
P.O. Box 109
Homewood, CA 95718

B. Checklist Date: 3 / 3 / 89

C. Contact Person: TED T. FUKUSHIMA

Telephone: (916) 322-7813

D. Purpose: Repair and modify an existing pier.

E. Location: In Lake Tahoe adjacent to Moana Beach Circle, McKinney Bay, El Dorado County.

F. Description: Extension and reconstruction of an existing pier.

G. Persons Contacted:

II. ENVIRONMENTAL IMPACTS. *(Explain all "yes" and "maybe" answers)*

A. *Earth.* Will the proposal result in:

	Yes	Maybe	N
1. Unstable earth conditions or changes in geologic substructures?	☐	☐	
2. Disruptions, displacements, compaction, or overcovering of the soil?	☐	☐	
3. Change in topography or ground surface relief features?	☐	☐	
4. The destruction, covering, or modification of any unique geologic or physical features?	☐	☐	
5. Any increase in wind or water erosion of soils, either on or off the site?	☐	☐	
6. Changes in deposition or erosion of beach sands, or changes in siltation, deposition or erosion which may modify the channel of a river or stream or the bed of the ocean or any bay, inlet, or lake?			
7. Exposure of all people or property to geologic hazards such as earthquakes, landslides, mudslides, ground failure, or similar hazards?			

CALENDAR PAGE 173

MINUTE PAGE 3706

	Yes	Maybe	No
B. Air Will the proposal result in:			
1. Substantial air emissions or deterioration of ambient air quality?			X
2. The creation of objectionable odors?			X
3. Alteration of air movement, moisture or temperature, or any change in climate, either locally or regionally?			X
C. *Water* Will the proposal result in:			
1. Changes in the currents, or the course or direction of water movements, in either marine or fresh waters?			X
2. Changes in absorption rates, drainage patterns, or the rate and amount of surface water runoff?			X
3. Alterations to the course or flow of flood waters?			X
4. Change in the amount of surface water in any water body?			X
5. Discharge into surface waters, or in any alteration of surface water quality, including but not limited to temperature, dissolved oxygen or turbidity?			X
6. Alteration of the direction or rate of flow of ground waters?			X
7. Change in the quantity of ground waters, either through direct additions or withdrawals, or through interception of an aquifer by cuts or excavations?			X
8. Substantial reduction in the amount of water otherwise available for public water supplies?			X
9. Exposure of people or property to water-related hazards such as flooding or tidal waves?			X
10. Significant changes in the temperature, flow or chemical content of surface thermal springs?			X
D. *Plant Life* Will the proposal result in:			
1. Change in the diversity of species, or number of any species of plants (including trees, shrubs, grass, crops, and aquatic plants)?			X
2. Reduction of the numbers of any unique, rare or endangered species of plants?			X
3. Introduction of new species of plants into an area, or in a barrier to the normal replenishment of existing species?			X
4. Reduction in acreage of any agricultural crop?			X
E. *Animal Life* Will the proposal result in:			
1. Change in the diversity of species, or numbers of any species of animals (birds, land animals including reptiles, fish and shellfish, benthic organisms, or insects)?			X
2. Reduction of the numbers of any unique, rare or endangered species of animals?			X
3. Introduction of new species of animals into an area, or result in a barrier to the migration or movement of animals?			X
4. Deterioration to existing fish or wildlife habitat?			X
F. *Noise* Will the proposal result in:			
1. Increase in existing noise levels?			X
2. Exposure of people to severe noise levels?			X
G. *Light and Glare* Will the proposal result in:			
1. The production of new light or glare?			X
H. *Land Use* Will the proposal result in:			
1. A substantial alteration of the present or planned land use of an area?			X
I. *Natural Resources* Will the proposal result in:			
1. Increase in the rate of use of any natural resources?			X
2. Substantial depletion of any nonrenewable resources?			X

	Yes	Maybe	No
J. *Risk of Upset.* Does the proposal result in:			
1. A risk of an explosion or the release of hazardous substances (including, but not limited to, oil, pesticides, chemicals, or radiation) in the event of an accident or upset conditions?	☐	☐	X
2. Possible interference with emergency response plan or an emergency evacuation plan?	☐	☐	X
K. *Population.* Will the proposal result in:			
1. The alteration, distribution, density, or growth rate of the human population of the area?	☐	☐	X
L. *Housing.* Will the proposal result in:			
1. Affecting existing housing, or create a demand for additional housing?	☐	☐	X
M. *Transportation/Circulation.* Will the proposal result in:			
1. Generation of substantial additional vehicular movement?	☐	☐	X
2. Affecting existing parking facilities, or create a demand for new parking?	☐	☐	X
3. Substantial impact upon existing transportation systems?	☐	☐	X
4. Alterations to present patterns of circulation or movement of people and/or goods?	☐	☐	X
5. Alterations to waterborne, rail, or air traffic?	☐	☐	X
6. Increase in traffic hazards to motor vehicles, bicyclists, or pedestrians?	☐	☐	X
N. *Public Services.* Will the proposal have an effect upon, or result in a need for new or altered governmental services in any of the following areas:			
1. Fire protection?	☐	☐	X
2. Police protection?	☐	☐	X
3. Schools?	☐	☐	X
4. Parks and other recreational facilities?	☐	☐	X
5. Maintenance of public facilities, including roads?	☐	☐	X
6. Other governmental services?	☐	☐	X
O. *Energy.* Will the proposal result in:			
1. Use of substantial amounts of fuel or energy?	☐	☐	X
2. Substantial increase in demand upon existing sources of energy, or require the development of new sources?	☐	☐	X
P. *Utilities.* Will the proposal result in a need for new systems, or substantial alterations to the following utilities:			
1. Power or natural gas?	☐	☐	X
2. Communication systems?	☐	☐	X
3. Water?	☐	☐	X
4. Sewer or septic tanks?	☐	☐	X
5. Storm water drainage?	☐	☐	X
6. Solid waste and disposal?	☐	☐	X
Q. *Human Health.* Will the proposal result in:			
1. Creation of any health hazard or potential health hazard (excluding mental health)?	☐	☐	X
2. Exposure of people to potential health hazards?	☐	☐	X
R. *Aesthetics.* Will the proposal result in:			
1. The obstruction of any scenic vista or view open to the public, or will the proposal result in the creation of an aesthetically offensive site open to public view?	☐	☐	X
S. *Recreation.* Will the proposal result in:			
1. An impact upon the quality or quantity of existing recreational opportunities?	☐	☐	X

CALENDAR PAGE 75
MINUTE PAGE 3[illegible]

T. *Cultural Resources.*

	Yes	Maybe	No
1. Will the proposal result in the alteration of or the destruction of a prehistoric or historic archeological site?	[ ]	[ ]	[x]
2. Will the proposal result in adverse physical or aesthetic effects to a prehistoric or historic building, structure, or object?	[ ]	[ ]	[x]
3. Does the proposal have the potential to cause a physical change which would affect unique ethnic cultural values?	[ ]	[ ]	[x]
4. Will the proposal restrict existing religious or sacred uses within the potential impact area?	[ ]	[ ]	[x]

U. *Mandatory Findings of Significance.*

1. Does the project have the potential to degrade the quality of the environment, reduce the habitat of a fish or wildlife species, cause a fish or wildlife population to drop below self-sustaining levels, threaten to eliminate a plant or animal community, reduce the number or restrict the range of a rare or endangered plant or animal or eliminate important examples of the major periods of California history or prehistory?	[ ]	[ ]	[x]
2. Does the project have the potential to achieve short-term, to the disadvantage of long-term, environmental goals?	[ ]	[ ]	[x]
3. Does the project have impacts which are individually limited, but cumulatively considerable?	[ ]	[ ]	[x]
4. Does the project have environmental effects which will cause substantial adverse effects on human beings, either directly or indirectly?	[ ]	[ ]	[x]

III. DISCUSSION OF ENVIRONMENTAL EVALUATION *(See Comments Attached)*

IV. PRELIMINARY DETERMINATION

On the basis of this initial evaluation:

[x] I find the proposed project COULD NOT have a significant effect on the environment, and a NEGATIVE DECLARATION will be prepared.

[ ] I find that although the proposed project could have a significant effect on the environment, there will not be a significant effect in this case because the mitigation measures described on an attached sheet have been added to the project. A NEGATIVE DECLARATION will be prepared.

[ ] I find the proposed project MAY have a significant effect on the environment, and an ENVIRONMENTAL IMPACT REPORT is required

Date: 3 / 3 / 89

Ted A. Tukushima
For the State Lands Commission

CALENDAR PAGE 76
MINUTE PAGE 3799