MINUTE ITEM
This Calendar Item No. 15
was approved as Minute Item
No. 15 by the State Lands
Commission by a vote of 2
0 at its 12/12/1989
meeting.

CALENDAR ITEM

15

A 7

S 1

12/12/89
PRC 3209
J. Ludlow

APPROVAL OF A RECREATIONAL PIER PERMIT

APPLICANT: E. S. and Geraldine Bertagnolli
P.O. Box 1400
Tahoe City, California 95730

AREA, TYPE LAND AND LOCATION:
A parcel of submerged land in Lake Tahoe near Tahoe City, Placer County.

LAND USE: Partial reconstruction of an existing pier, reconstruction of a boathouse, and the retention of two previously unauthorized mooring buoys.

TERMS OF PROPOSED PERMIT:
Initial period: Five-years beginning December 12, 1989.

CONSIDERATION: Rent-free, pursuant to Section 6503.5 of the P.R.C.

APPLICANT STATUS:
Applicant is owner of upland.

PREREQUISITE CONDITIONS, FEES AND EXPENSES:
Filing fee and processing costs have been received.

STATUTORY AND OTHER REFERENCES:

A. P.R.C.: Div. 6, Parts 1 and 2; Div. 13.

B. Cal. Code Regs.: Title 2, Div. 3; Title 14, Div. 6.

AB 884: 04/02/90.

OTHER PERTINENT INFORMATION:

1. Pursuant to the Commission's delegation of authority and the State CEQA Guidelines (14 Cal. Code Regs. 15025), the staff has prepared a Proposed Negative Declaration identified as EIR ND 475, State Clearinghouse No. 89052204. Such Proposed Negative Declaration was prepared and circulated for public review pursuant to the provisions of CEQA.

   Based upon the Initial Study, the Proposed Negative Declaration, and the comments received in response thereto, there is no substantial evidence that the project will have a significant effect on the environment. (14 Cal. Code Regs. 15074(b))

2. The Applicant has revised the application to include only the partial reconstruction of the existing pier and reconstruction of the boathouse. All work will be conducted waterward of the 6,223-foot low water line and will be accomplished from a barge with a pile driver. All construction wastes will be collected onto the barge and disposed of at the nearest dumpster/sanitary landfill site.

3. There will be no materials stored or placed, nor will any activity associated with the construction, be conducted above the low waterline of the subject property. This will prevent any disturbance to what may be considered a Tahoe Yellow Cress (Rorippa) habitat.

4. In order to determine the other potential trust uses in the area of the proposed project, the staff contacted representatives of the following agencies: Tahoe Regional Planning Agency, Department of Fish and Game, County of Placer, and the Tahoe Conservancy. None of these agencies expressed a concern that the proposed project would have a significant effect on trust uses in the area. The agencies did not identify any trust needs which were not being met by existing facilities in the area. Identified trust uses in this area would include swimming, boating, walking along the beach, and views of the lake.

   This property was physically inspected by staff for purposes of evaluating the impact of the project on the public trust.

5. This activity involves lands identified as possessing significant environmental values pursuant to P.R.C. 6370, et seq. Based upon the staff's consultation with the persons nominating such lands and through the CEQA review process, it is the staff's opinion that the project, as proposed, is consistent with its use classification.

6. All permits covering structures in Lake Tahoe will include a condition subsequent that if any structure authorized is found to be in nonconformance with the Tahoe Regional Planning Agency's shorezone ordinance and if any alterations, repairs, or removal required pursuant to said ordinance are not accomplished within the designated time period, then the permit will be automatically terminated, effective upon notice by the State, and the site shall be cleared pursuant to the terms thereof.

7. All permits issued at Lake Tahoe include special language in which the permittee/lessee agrees to protect and replace or restore, if required, the habitat of Rorippa subumbellata, commonly called the Tahoe Yellow Cress, a State-listed endangered plant species.

8. All applicants at Lake Tahoe will be notified that the public has a right to pass along the shoreline and the permittee must provide a reasonable means for public passage along the shorezone area occupied by the permitted structure.

APPROVALS OBTAINED:

Placer County, Tahoe Regional Planning Agency, Department of Fish and Game, Lahontan Regional Water Quality Control Board, and United States Army Corps of Engineers (GP016-003).

FURTHER APPROVALS REQUIRED:

None.

EXHIBITS:

A. Land Description.
B. Location Map.
C. Negative Declaration.
D. Placer County Letter of Approval.

IT IS RECOMMENDED THAT THE COMMISSION:

1. CERTIFY THAT A NEGATIVE DECLARATION, EIR ND 475, STATE CLEARINGHOUSE NO. 89052204, WAS PREPARED FOR THIS PROJECT PURSUANT TO THE PROVISIONS OF THE CEQA AND THAT THE COMMISSION HAS REVIEWED AND CONSIDERED THE INFORMATION CONTAINED THEREIN.

2. DETERMINE THAT THE PROJECT, AS APPROVED, WILL NOT HAVE A SIGNIFICANT EFFECT ON THE ENVIRONMENT.

3. AUTHORIZE ISSUANCE TO E.S. BERTAGNOLLI AND GERALDINE BERTAGNOLLI OF A FIVE-YEAR RECREATIONAL PIER PERMIT, BEGINNING DECEMBER 12, 1989; FOR THE PARTIAL RECONSTRUCTION OF AN EXISTING PIER, RECONSTRUCTION OF A BOATHOUSE, AND THE RETENTION OF TWO PREVIOUSLY UNAUTHORIZED MOORING BUOYS ON THE LAND DESCRIBED ON EXHIBIT "A" ATTACHED AND BY REFERENCE MADE A PART HEREOF.

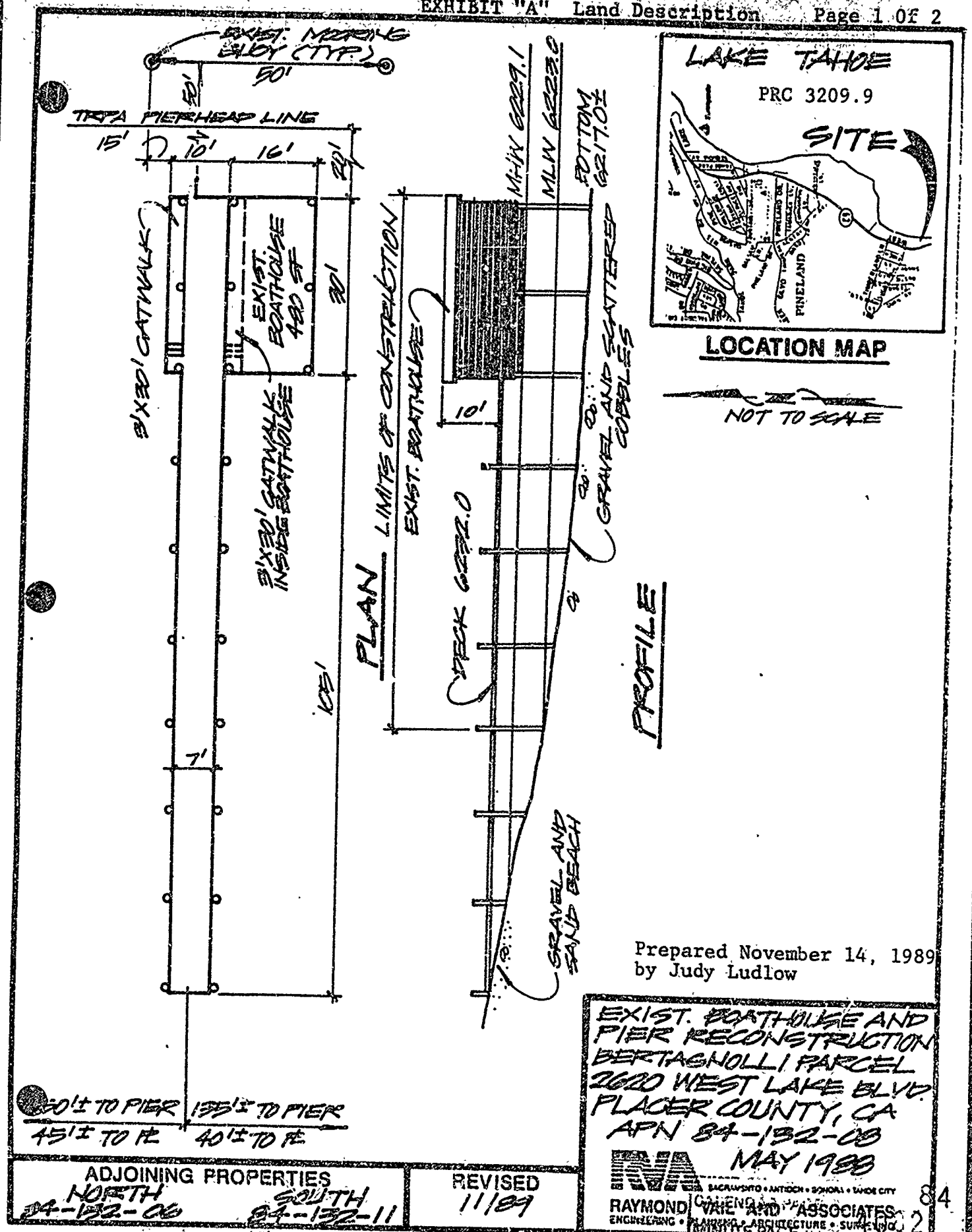
EXIST. MOORING BUOY (TYP.)
50'
50'
TRPA PIERHEAD LINE
15'
10'
16'
22'
3'X30' GATWALK
EXIST. BOATHOUSE 420 SF
30'
3'X30' GATWALK INSIDE BOATHOUSE
LIMITS OF CONSTRUCTION
EXIST. BOATHOUSE
10'
105'
7'
PLAN
MHW 6229.1
MLW 6223.0
BOTTOM 6217.0±
GRAVEL AND SCATTERED COBBLES
DECK 6232.0
GRAVEL AND SAND BEACH
PROFILE
LAKE TAHOE
PRC 3209.9
SITE
PINELAND
LOCATION MAP
NOT TO SCALE
30'± TO PIER
45'± TO PL
135'± TO PIER
40'± TO PL
Prepared November 14, 1989
by Judy Ludlow
EXIST. BOATHOUSE AND PIER RECONSTRUCTION
BERTAGNOLLI PARCEL
2620 WEST LAKE BLVD.
PLACER COUNTY, CA
APN 84-132-08
MAY 1988
RAYMOND VAIL AND ASSOCIATES
ADJOINING PROPERTIES
NORTH 84-132-06
SOUTH 84-132-11
REVISED 11/89

EXHIBIT "A"

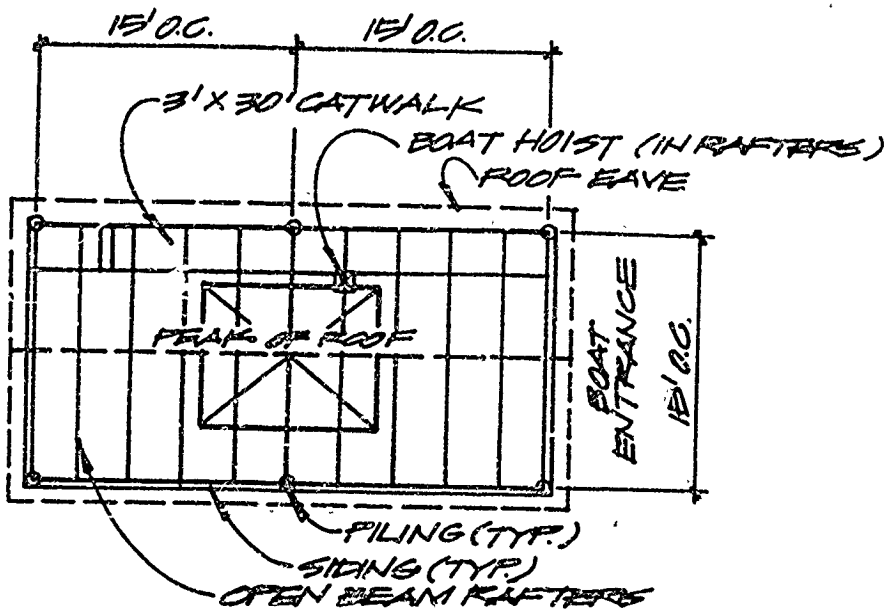

EXISTING BOATHOUSE PLAN

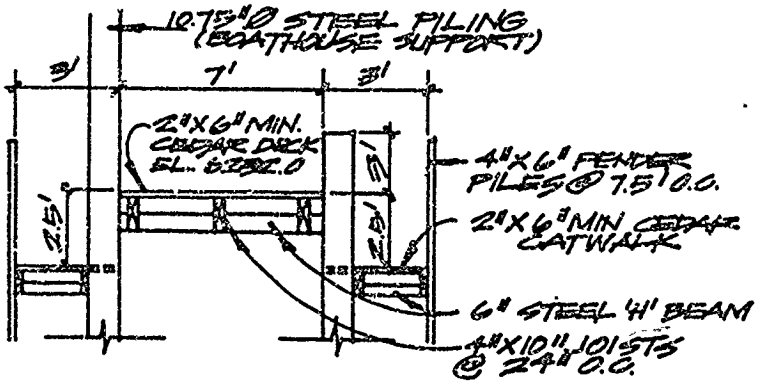

PIERHEAD SECTION

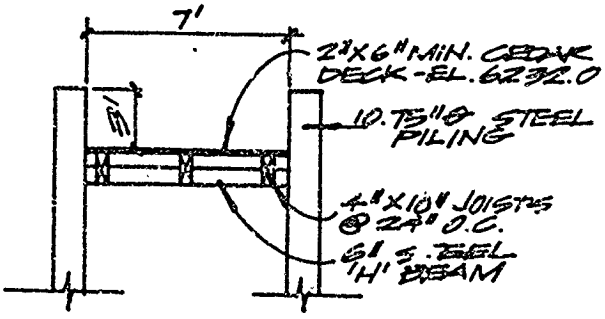

WALKWAY SECTION

EXIST. BOATHOUSE AND PIER RECONSTRUCTION
BERTAGNOLLI PARCEL
2620 WEST LAKE BLVD.
PLACER COUNTY, CA
APN 84-132-08
MAY 1988

RVA SACRAMENTO • ANTIOCH • SONORA • DAVIS CITY
RAYMOND VAIL AND ASSOCIATES
ENGINEERING • LAND ARCHITECTURE • SURVEYING

ADJOINING PROPERTIES
NORTH 84-132-06 SOUTH 84-132-11

REVISED 11/89

MINUTE PAGE 7125 3N

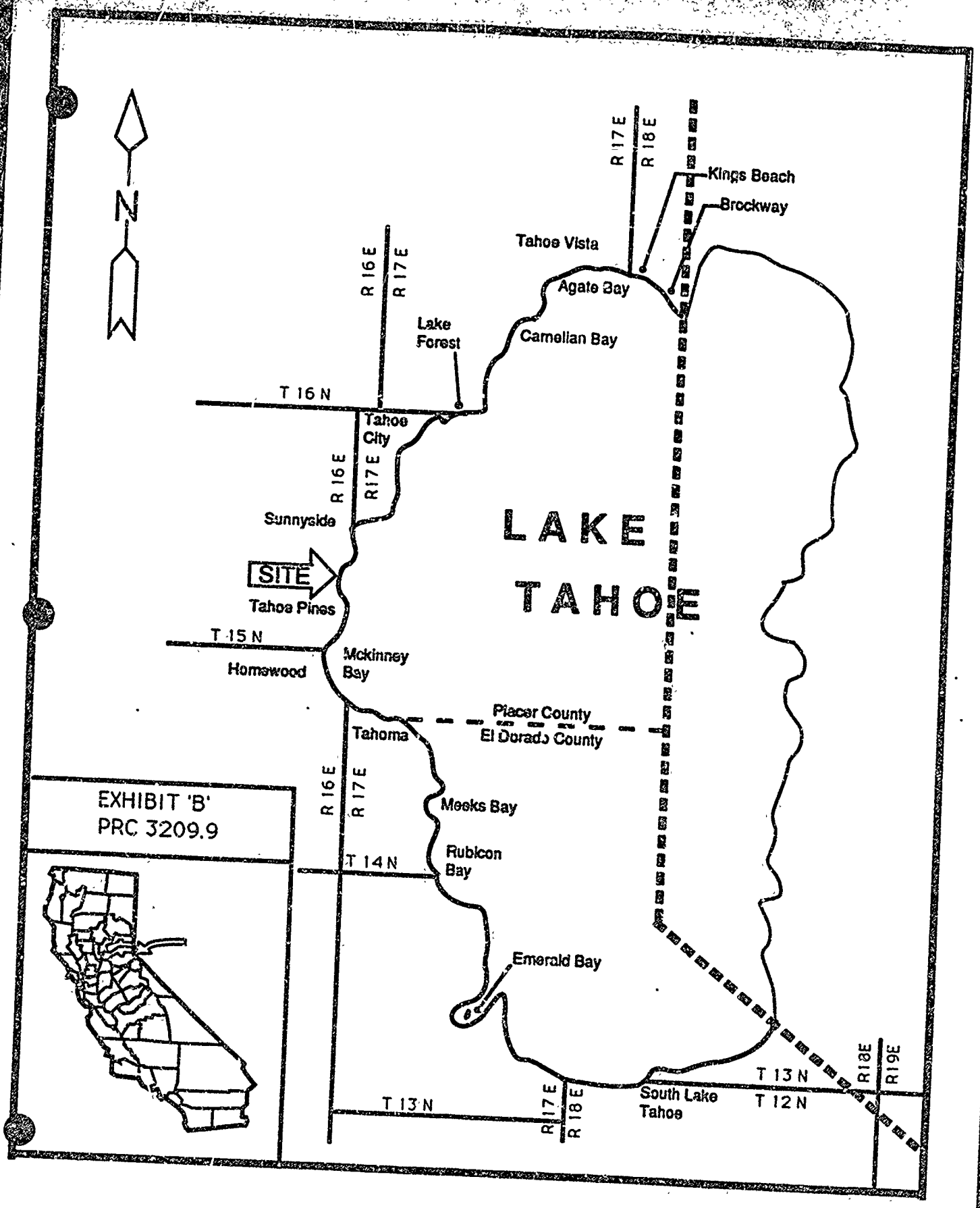

EXHIBIT 'B'
PRC 3209.9

CALENDAR PAGE 86
MINUTE PAGE 4064

EXHIBIT "C"
8905 2204

GEORGE DEUKMEJIAN, Governor

STATE OF CALIFORNIA–STATE LANDS COMMISSION

STATE LANDS COMMISSION
1807 13TH STREET
SACRAMENTO, CALIFORNIA 95814

RECEIVED
MAY 23 1989
STATE
CLEARINGHOUSE

PROPOSED NEGATIVE DECLARATION

EIR ND 475

File Ref.: WP 3209

SCH#:

Project Title: BERTAGNOLLI PIER AND BOATHOUSE RECONSTRUCTION

Project Proponent: Ettore Bertagnolli

Project Location: In Lake Tahoe adjacent to 2620 West Lake Blvd. - McKinney Bay southwesterly of Tahoe City, Placer County.

Project Description: Reconstruction of an existing pier and boathouse and the retention of two existing, unauthorized mooring buoys.

Contact Person: TED T. FUKUSHIMA Telephone: (916)322-7813

This document is prepared pursuant to the requirements of the California Environmental Quality Act (Section 21000 et seq., Public Resources Code), the State CEQA Guidelines (Section 15000 et seq., Title 14, California Code Regulations), and the State Lands Commission regulations (Section 2901 et seq., Title 2, California Code Regulations).

Based upon the attached Initial Study, it has been found that:

[x] the project will not have a significant effect on the environment.

[ ] mitigation measures included in the project will avoid potentially significant effects.

CALENDAR PAGE 87
MINUTE PAGE 4085

Form 13.17 (2/89)

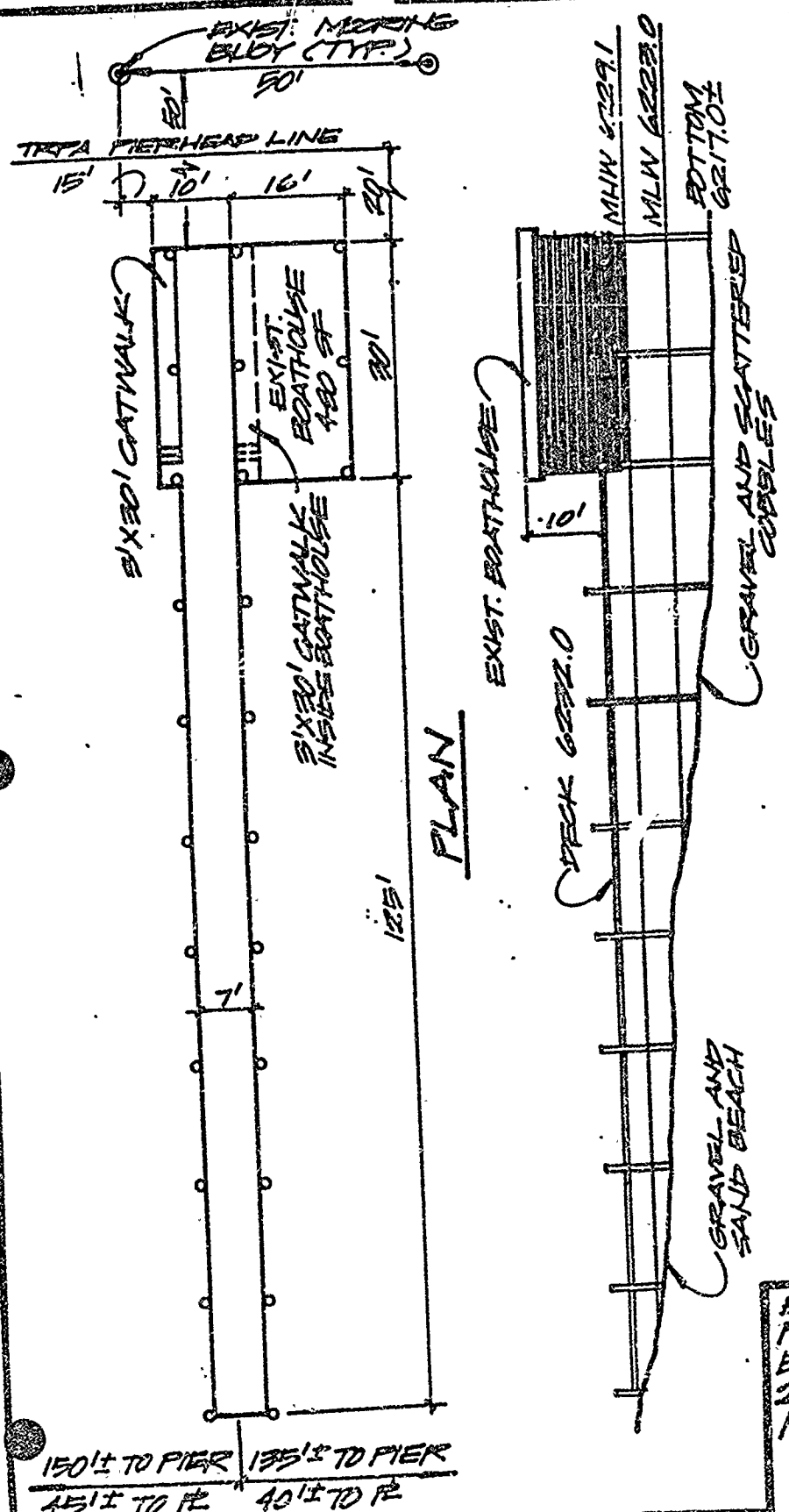

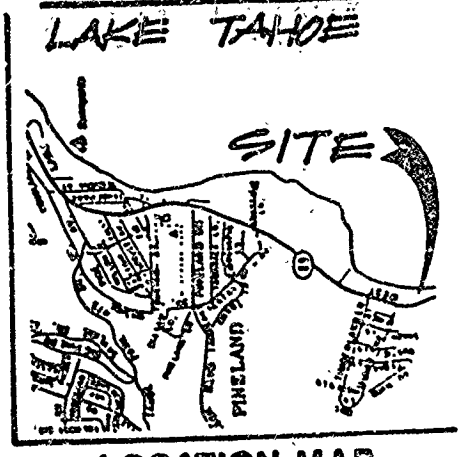

LOCATION MAP

NOT TO SCALE

CALENDAR PAGE

MINUTE PAGE

EXIST. BOATHOUSE AND PIER RECONSTRUCTION
BERTAGNOLLI PARCEL
2620 WEST LAKE BLVD.
PLACER COUNTY, CA
APN 84-132-08

MAY 1988

88

CALENDAR PAGE

MINUTE PAGE

RAYMOND VAIL AND ASSOCIATES

ADJOINING PROPERTIES
NORTH 84-132-06
SOUTH 84-132-11

REVISED 5/89

W.O. 7125.31L
December 28, 1988

RE: PIER BOATHOUSE REPAIR - BERTAGNOLLI PROPERTY
PLACER COUNTY APN: 84-132-08

PROJECT NARRATIVE

Reconstruction of existing boathouse/pier: to be constructed with 10.75" diameter steel piles at 15' O.C., repair and/or replace existing wood siding and roof. Pier to be constructed with 10.75" diameter steel piles at 15' O.C., 6" steel "H" beams, 4" x 10" wood joists at 24" O.C., 2" x 6" min. cedar deck, 3' x 45' catwalks. Repair and/or replace existing electric service. No change of location, configuration, or increase in size of existing boathouse/pier (see submittal drawing.)

CONSTRUCTION METHOD

Reconstructionof existing boathouse/pier is to be by barge with pile driver; cassion or sleeve will be used when sediment is resuspended while pile driving. Anchorage of barge will be to existing structure and/or anchors required for adequate stabilization of barge on the lake. All construction wastes will be collected onto barge and/or onshore dumpster and disposed at the nearest dumpster/sanitary landfill site. Small boats (John boats) and tarps to be under construction areas to provide collection of construction debris preventing any discharge of wastes to the lake.

STATE LANDS COMMISSION

Date Filed: / /

File Ref.: PRC-4709.9

ENVIRONMENTAL IMPACT ASSESSMENT FORM – Part I

(To be completed by applicant)

FORM 69.3(11/82)

A. GENERAL INFORMATION

1. Name, address, and telephone number:

a. Applicant

Ettore Bertagnolli
P.O. Box 1400
Tahoe City, CA 95730
(916) 583-6898

b. Contact person if other than applicant:

Kevin M. Agan - Agent
Raymond Vail & Associates
P.O. Box 879
Tahoe City, CA 95730
(916) 583-3417

2. a. Project location: (Please reference to nearest town or community and include county)

In Lake Tahoe adjacent to 2620 West Lake Blvd.
McKinney Bay southwesterly of Tahoe City, Placer County

b. Assessor's parcel number: 84-132-08

3. Existing zoning of project site:

4. Existing land use of project site. Pier and boathouse with two mooring buoys

5. Proposed use of site: Reconstruction of pier and boathouse

6. Other permits required: Tahoe Regional Planning Agency, Placer County

B. PROJECT DESCRIPTION

1. For building construction projects, complete "ATTACHMENT A".

2. For non-building construction projects. Describe fully, the proposed activity, its purpose and intended use, e.g. for proposed mineral prospecting permits, include the number of test holes, size of holes, amount of material to be excavated, maximum surface area of disturbance, hole locations, depth of holes, etc. Attach plans or other drawings as necessary.

C. ENVIRONMENTAL SETTING

1. Describe the project site as it exists before the project, including information on topography, soil stability, plants and animals, and any cultural, historical, or scenic aspects. Describe any existing structures on the site, and the use of the structures.

2. Describe the surrounding properties, including information on plants and animals and any cultural, historical, or scenic aspects. indicate the type of land use (residential, commercial, etc.), intensity of land use (one-family, apartment houses, shops, department stores, etc.), and scale of development (height, frontage, set-back, rear yard, etc.).

D. ENVIRONMENTAL IMPACT ASSESSMENT

Answer the following questions by placing a check in the appropriate box. Discuss all items checked "yes" or "maybe". (Attach additional sheets as necessary)

Will the project involve:

		YES	MAYBE	NO
1.	a change in existing features of any bays, tidelands, beaches, lakes, or hills, or substantial alteration of ground contours?	☐	☐	☒
2.	a change in scenic views or vistas from existing residential areas or public lands or roads?	☐	☐	☒
3.	a change in pattern, scale, or character of the general area of project?	☐	☐	☒
4.	a significant effect on plant or animal life?	☐	☐	☒
5.	significant amounts of solid waste or litter?	☐	☐	☒
6.	a change in dust, ash, smoke, fumes, or odors in the vicinity?	☐	☐	☒
7.	a change in ocean, bay, lake, stream, or ground water quality or quantity, or alteration of existing drainage patterns?	☐	☐	☒
8.	a change in existing noise or vibration levels in the vicinity?	☐	☐	☒
9.	construction on filled land or on slope of 10 percent or more?	☐	☐	☒
10.	use or disposal of potentially hazardous materials, such as toxic or radioactive substances, flammables, or explosives?	☐	☐	☒
11.	a change in demand for municipal services (police, fire, water, sewage, etc.)?	☐	☐	☒
12.	an increase in fossil fuel consumption (electricity, oil, natural gas, etc.)?	☐	☐	☒
13.	a larger project or a series of projects?	☐	☐	☒

E. CERTIFICATION

I hereby certify that the statements furnished above and in the attached exhibits present the data and information required for this initial evaluation to the best of my ability, and that the facts, statements, and information presented are true and correct to the best of my knowledge and belief.

Date: _____

Signed: [signature]
Kevin M. Agan - Agent
Raymond Vail & Associates

STATE LANDS COMMISSION

ENVIRONMENTAL IMPACT ASSESSMENT CHECKLIST – PART II

Form 13.20 (7/82)

File Ref.: WP 3209

I. BACKGROUND INFORMATION

A. Applicant: Ettore Bertagnolli
P.O. Box 1400
Tahoe City, CA 95730

B. Checklist Date: 5 / 18 / 89

C. Contact Person: TED T. FUKUSHIMA

Telephone: (916) 322-7813

D. Purpose: A permit for the reconstruction and the continued and maintenance of a existing pier and boathouse and to place under permit, two existing unauthorized mooring buoys

E. Location: In Lake Tahoe adjacent to 2620 West Lake Blvd. - McKinney Bay southwesterly of Tahoe City, Placer County.

F. Description: Reconstruction of an existing pier and boathouse and the retention of two existing, unauthorized mooring buoys.

G. Persons Contacted:

II. ENVIRONMENTAL IMPACTS. *(Explain all "yes" and "maybe" answers)*

A. *Earth.* Will the proposal result in:

	Yes	Maybe	No
1. Unstable earth conditions or changes in geologic substructures?	☐	☐	X
2. Disruptions, displacements, compaction, or overcovering of the soil?	☐	☐	X
3. Change in topography or ground surface relief features?	☐	☐	X
4. The destruction, covering, or modification of any unique geologic or physical features?	☐	☐	X
5. Any increase in wind or water erosion of soils, either on or off the site?	☐	☐	X
6. Changes in deposition or erosion of beach sands, or changes in siltation, deposition or erosion which may modify the channel of a river or stream or the bed of the ocean or any bay, inlet, or lake?	☐	☐	X
7. Exposure of all people or property to geologic hazards such as earthquakes, landslides, mudslides, ground failure, or similar hazards?	☐	☐	X

CALENDAR PAGE 921
4000

B. *Air.* Will the proposal result in:

	Yes	Maybe	No
1. Substantial air emmissions or deterioration of ambient air quality?			X
2. The creation of objectionable odors?			
3. Alteration of air movement, moisture or temperature, or any change in climate, either locally or regionally?			X

C. *Water.* Will the proposal result in:

	Yes	Maybe	No
1. Changes in the currents, or the course or direction of water movements, in either marine or fresh waters?			X
2. Changes in absorption rates, drainage patterns, or the rate and amount of surface water runoff?			X
3. Alterations to the course or flow of flood waters?			X
4. Change in the amount of surface water in any water body?			X
5. Discharge into surface waters, or in any alteration of surface water quality, including but not limited to temperature, dissolved oxygen or turbidity?			X
6. Alteration of the direction or rate of flow of ground waters?		X	
7. Change in the quantity of ground waters, either through direct additions or withdrawals, or through interception of an aquifer by cuts or excavations?			X
8. Substantial reduction in the amount of water otherwise available for public water supplies?			X
9. Exposure of people or property to water-related hazards such as flooding or tidal waves?			X
10. Significant changes in the temperature, flow or chemical content of surface thermal springs?			X

D. *Plant Life.* Will the proposal result in:

	Yes	Maybe	No
1. Change in the diversity of species, or number of any species of plants (including trees, shrubs, grass, crops, and aquatic plants)?			X
2. Reduction of the numbers of any unique, rare or endangered species of plants?			X
3. Introduction of new species of plants into an area, or in a barrier to the normal replenishment of existing species?			
4. Reduction in acreage of any agricultural crop?			X

E. *Animal Life* Will the proposal result in:

	Yes	Maybe	No
1. Change in the diversity of species, or numbers of any species of animals (birds, land animals including reptiles, fish and shellfish, benthic organisms, or insects)?			X
2. Reduction of the numbers of any unique, rare or endangered species of animals?			X
3. Introduction of new species of animals into an area, or result in a barrier to the migration or movement of animals?			X
4. Deterioration to existing fish or wildlife habitat?			X

F. *Noise.* Will the proposal result in:

	Yes	Maybe	No
1. Increase in existing noise levels?		X	
2. Exposure of people to severe noise levels?			X

G. *Light and Glare.* Will the proposal result in:

	Yes	Maybe	No
1. The production of new light or glare?			X

H. *Land Use.* Will the proposal result in:

	Yes	Maybe	No
1. A substantial alteration of the present or planned land use of an area?			X

I. *Natural Resources.* Will the proposal result in:

	Yes	Maybe	No
1. Increase in the rate of use of any natural resources?			
2. Substantial depletion of any nonrenewable resources?			X

CALENDAR PAGE 93
MINUTE PAGE 4091

EXHIBIT "D"

PLACER COUNTY

DEPARTMENT OF PUBLIC WORKS

JACK WARREN, Director
JAN WITTER, Assistant Director
LARRY ODDO, Deputy Director
ALAN ROY, Deputy Director

OPERATING DIVISIONS
Administration
Engineering
Equipment Maintenance
Road Maintenance
Special Districts
Surveying
Transportation

RVA - TAHOE

MAR 22 1989

RECEIVED

March 3, 1989

Judy Ludlow
California State Lands Commission
1807 - 13th Street
Sacramento, CA 95814

RE: **PIER - SHOREZONE CONSTRUCTION**

The County of Placer has reviewed the below referenced requests for construction activities within the Shorezone of Lake Tahoe. We have no objection to the construction activities described in the below applications contingent upon approval by your office.

1.	R.S. Bertagnolli	PRC 3209.9
2.	Charlotte and Robert Angell	W 24144
3.	Sweet/Avanessian	PRC 5022
4.	Wickland	PRC 3599
5.	Lyons/Hawkins	WP 5884
6.	Main - 83-162-28	PRC 6714
7.	Main - 83-162-31	W 24134
8.	McFarland	PRC 3659
9.	Gibb	WP 3652
10.	Crabtree	W 21445
11.	English	W 1124.38
12.	Wallis	PRC 4314
13.	Metas	W 24103
14.	Barrow	PRC 7167.9
15.	Nahas	PRC 4066
16.	Hicks	W 21665

Should you have any questions or if I can be of further assistance, please call at your convenience.

COUNTY OF PLACER
DEPARTMENT OF PUBLIC WORKS
JACK WARREN, DIRECTOR

James McLeod

JAMES MCLEOD
ASSISTANT CIVIL ENGINEER

JHims

	Yes	Maybe	No
J. *Risk of Upset.* Does the proposal result in:			
1. A risk of an explosion or the release of hazardous substances (including, but not limited to, oil, pesticides, chemicals, or radiation) in the event of an accident or upset conditions?	☐	☐	X
2. Possible interference with emergency response plan or an emergency evacuation plan?	☐	☐	X
K. *Population.* Will the proposal result in:			
1. The alteration, distribution, density, or growth rate of the human population of the area?	☐	☐	X
L. *Housing.* Will the proposal result in:			
1. Affecting existing housing, or create a demand for additional housing?	☐	☐	X
M. *Transportation/Circulation.* Will the proposal result in:			
1. Generation of substantial additional vehicular movement?	☐	☐	X
2. Affecting existing parking facilities, or create a demand for new parking?	☐	☐	X
3. Substantial impact upon existing transportation systems?	☐	☐	X
4. Alterations to present patterns of circulation or movement of people and/or goods?	☐	☐	X
5. Alterations to waterborne, rail, or air traffic?	☐	☐	X
6. Increase in traffic hazards to motor vehicles, bicyclists, or pedestrians?	☐	☐	X
N. *Public Services.* Will the proposal have an effect upon, or result in a need for new or altered governmental services in any of the following areas:			
1. Fire protection?	☐	☐	X
2. Police protection?	☐	☐	X
3. Schools?	☐	☐	X
4. Parks and other recreational facilities?	☐	☐	X
5. Maintenance of public facilities, including roads?	☐	☐	X
6. Other governmental services?	☐	☐	X
O. *Energy.* Will the proposal result in:			
1. Use of substantial amounts of fuel or energy?	☐	☐	X
2. Substantial increase in demand upon existing sources of energy, or require the development of new sources?	☐	☐	X
P. *Utilities.* Will the proposal result in a need for new systems, or substantial alterations to the following utilities:			
1. Power or natural gas?	☐	☐	X
2. Communication systems?	☐	☐	X
3. Water?	☐	☐	X
4. Sewer or septic tanks?	☐	☐	X
5. Storm water drainage?	☐	☐	X
6. Solid waste and disposal?	☐	☐	X
Q. *Human Health.* Will the proposal result in:			
1. Creation of any health hazard or potential health hazard (excluding mental health)?	☐	☐	X
2. Exposure of people to potential health hazards?	☐	☐	X
R. *Aesthetics.* Will the proposal result in:			
1. The obstruction of any scenic vista or view open to the public, or will the proposal result in the creation of an aesthetically offensive site open to public view?	☐	☐	X
S. *Recreation.* Will the proposal result in:			
1. An impact upon the quality or quantity of existing recreational opportunities?	☐	☐	X

	Yes	Maybe	No
T. *Cultural Resources*			
1. Will the proposal result in the alteration of or the destruction of a prehistoric or historic archeological site?	[ ]	[ ]	[x]
2. Will the proposal result in adverse physical or aesthetic effects to a prehistoric or historic building, structure, or object?	[ ]	[ ]	[x]
3. Does the proposal have the potential to cause a physical change which would affect unique ethnic cultural values?	[ ]	[ ]	[x]
4. Will the proposal restrict existing religious or sacred uses within the potential impact area?	[ ]	[ ]	[x]
U. *Mandatory Findings of Significance.*			
1. Does the project have the potential to degrade the quality of the environment, reduce the habitat of a fish or wildlife species, cause a fish or wildlife population to drop below self-sustaining levels, threaten to eliminate a plant or animal community, reduce the number or restrict the range of a rare or endangered plant or animal or eliminate important examples of the major periods of California history or prehistory?	[ ]	[ ]	[x]
2. Does the project have the potential to achieve short-term, to the disadvantage of long-term, environmental goals?	[ ]	[ ]	[x]
3. Does the project have impacts which are individually limited, but cumulatively considerable?	[ ]	[ ]	[x]
4. Does the project have environmental effects which will cause substantial adverse effects on human beings, either directly or indirectly?	[ ]	[ ]	[x]

III. DISCUSSION OF ENVIRONMENTAL EVALUATION *(See Comments Attached)*

C5 - There could be a slight rise in the turbidity level during the construction however, compliance with water quality control requirements should this impact to a minimum.

F1 - There could be a rise in the ambient noise levels during construction however, this should be of relatively short term duration.

IV. PRELIMINARY DETERMINATION

On the basis of this initial evaluation:

[x] I find the proposed project COULD NOT have a significant effect on the environment, and a NEGATIVE DECLARATION will be prepared.

[ ] I find that although the proposed project could have a significant effect on the environment, there will not be a significant effect in this case because the mitigation measures described on an attached sheet have been added to the project. A NEGATIVE DECLARATION will be prepared.

[ ] I find the proposed project MAY have a significant effect on the environment, and an ENVIRONMENTAL IMPACT REPORT is required.

Date: 5 / 18 /89

For the State Lands Commission

96
4094

EXHIBIT "D"

PLACER COUNTY

DEPARTMENT OF PUBLIC WORKS

JACK WARREN, Director
JAN WITTER, Assistant Director
LARRY ODDO, Deputy Director
ALAN ROY, Deputy Director

OPERATING DIVISION:
Administration
Engineering
Equipment Maintenance
Road Maintenance
Special Districts
Surveying
Transportation

March 3, 1989

Judy Ludlow
California State Lands Commission
1807 - 13th Street
Sacramento, CA 95814

RE: **PIER - SHOREZONE CONSTRUCTION**

The County of Placer has reviewed the below referenced requests for construction activities within the Shorezone of Lake Tahoe. We have no objection to the construction activities described in the below applications contingent upon approval by your office.

1.	E.S. Bertagnolli	PRC 3209.9
2.	Charlotte and Robert Angell	W 24144
3.	Sweet/Avanessian	PRC 5022
4.	Wickland	PRC 3599
5.	Lyons/Hawkins	WP 5884
6.	Mein - 83-162-28	PRC 6714
7.	Mein - 83-162-31	W 24134
8.	McFarland	PRC 3659
9.	Gibb	WP 3652
10.	Crabtree	W 21445
11.	English	W 1124.38
12.	Wallis	PRC 4314
13.	Metas	W 24103
14.	Barrow	PRC 7167.9
15.	Nahas	PRC 4066
16.	Hicks	W 21665

Should you have any questions or if I can be of further assistance, please call at your convenience.

COUNTY OF PLACER
DEPARTMENT OF PUBLIC WORKS
JACK WARREN, DIRECTOR

JAMES MCLEOD
ASSISTANT CIVIL ENGINEER

JM:ms

CALENDAR PAGE 97
MINUTE PAGE 4035