MINUTE ITEM
This Calendar Item No. C46 was approved as Minute Item No. 46 by the California State Lands Commission by a vote of 2 to -0- at its 2/27/96 meeting.

CALENDAR ITEM
C46

A 67

S 35

02/27/96
PRC 6073.9
C. N. Perez

RECREATIONAL PIER LEASE

APPLICANT:

Lawrence W. Zarilli
34 Creek Road
Irvine, California 92714-4798

LOCATION:

Submerged land at Lot 61, Tract 8040, 3581 Courtside Circle in Huntington Harbor, Orange County.

EXHIBITS:

A. Site Map

AB 884:

N/A

RECOMMENDED ACTION:

IT IS RECOMMENDED THAT THE COMMISSION:

CEQA FINDING:

FIND THAT THE ACTIVITY IS EXEMPT FROM THE REQUIREMENTS OF THE CEQA PURSUANT TO 14 CAL. CODE REGS. 15061 AS A CATEGORICALLY EXEMPT PROJECT, CLASS 1, EXISTING FACILITIES, 2 CAL. CODE REGS. 2905(a)(2).

SIGNIFICANT LANDS INVENTORY FINDING:

FIND THAT THIS ACTIVITY IS CONSISTENT WITH THE USE CLASSIFICATION DESIGNATED FOR THE LAND PURSUANT TO PUBLIC RESOURCE CODE SECTIONS 6370, ET SEQ.

AUTHORIZATION:

AUTHORIZE ISSUANCE TO LAWRENCE W. ZARILLI, OF A TEN-YEAR RECREATIONAL PIER LEASE BEGINNING ON JANUARY 1, 1996; NO MONETARY CONSIDERATION PURSUANT TO PUBLIC RESOURCES CODE SECTION 6503.5, FOR THE CONTINUED USE AND MAINTENANCE OF A BOAT DOCK IN HUNTINGTON HARBOR, ORANGE COUNTY, AS SHOWN AND LOCATED ON THE LAND DESCRIBED ON EXHIBIT "A" ATTACHED AND BY REFERENCE MADE A PART HEREOF.

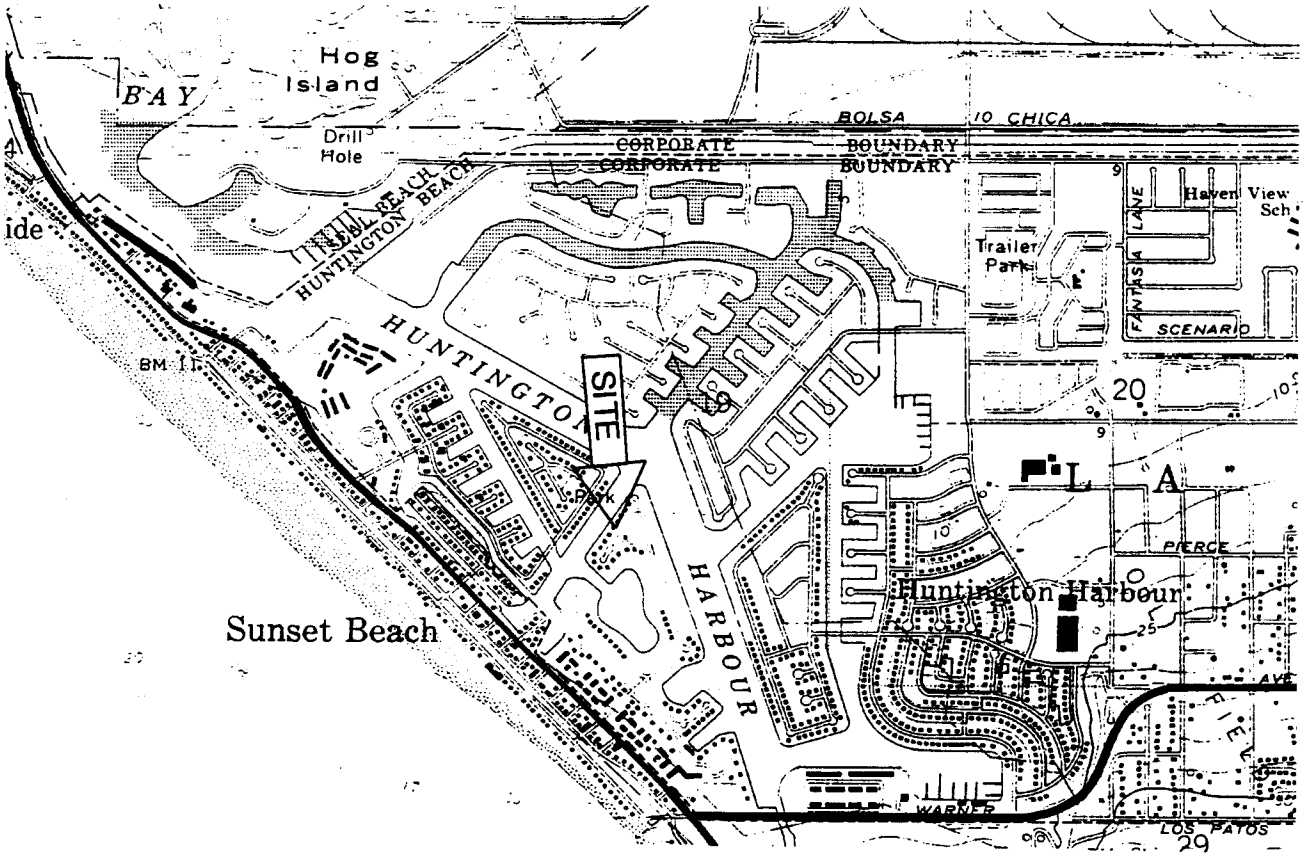

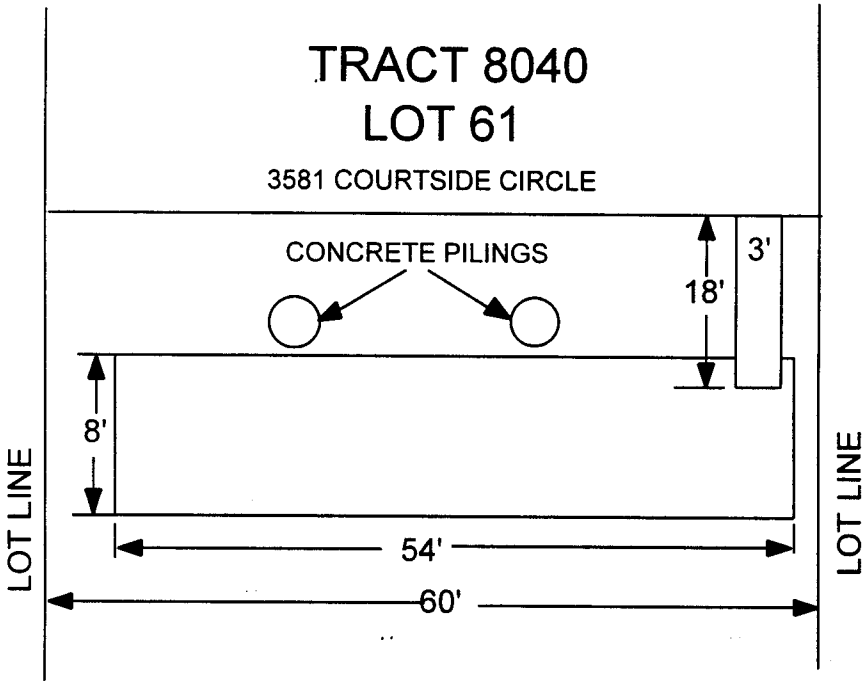

EXHIBIT "A"
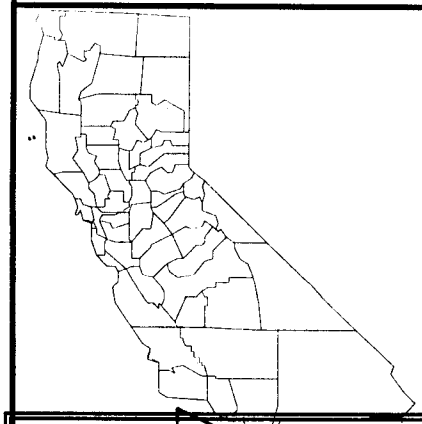
SITE MAP PRC 6073.9
RECREATIONAL PIER
HUNTINGTON BEACH
ORANGE COUNTY