MINUTE ITEM
This Calendar Item No. C72 was approved as Minute Item No. 72 by the California State Lands Commission by a vote of 3 to 0 at its 6-19-98 meeting.

CALENDAR ITEM
C72

A 4

S 1

06/19/98
PRC 7513.9
J. Ludlow

RECREATIONAL PIER LEASE

APPLICANTS:

Grant B. Hieshima and Donna M. Hieshima
3312 Easter Circle
Huntington Beach, California 92649

AREA, LAND TYPE, AND LOCATION:

Sovereign lands in Lake Tahoe, near Meeks Bay, El Dorado County.

AUTHORIZED USE:

Continued use and maintenance of an existing pier, boat lift and two mooring buoys, as shown on the attached Exhibit A.

LEASE TERM:

Ten years, beginning April 21, 1998.

CONSIDERATION:

No monetary consideration pursuant to Public Resources Code section 6503.5.

SPECIFIC LEASE PROVISIONS:

Insurance:

Liability insurance in the amount of no less than $300,000.

Other:

This lease is conditioned on Lessee's obtaining authorization from the Tahoe Regional Planning Agency (TRPA) for the mooring buoys within two years from the effective date of the authorization of the buoys by the Commission.

OTHER PERTINENT INFORMATION:

1. Pursuant to the Commission's delegation of authority and the State CEQA Guidelines (Title 14, California Code of Regulations, section 15061), the staff has determined that this activity is exempt from the requirements of the CEQA as a categorically exempt project. The project is exempt under Class 1, Existing Facilities; Title 2, California Code of Regulations, section

2905 (a)(2).

Authority: Public Resources Code section 21084 and Title 14, California Code of Regulations, section 15300 and Title 2, California Code of Regulations, section 2905.

2. This activity involves lands identified as possessing significant environmental values pursuant to Public Resources Code sections 6370, et seq. Based upon the staff's consultation with the persons nominating such lands and through the CEQA review process, it is the staff's opinion that the project, as proposed, is consistent with its use classification.

FURTHER APPROVALS REQUIRED:
Buoys: Tahoe Regional Planning Agency

EXHIBIT:
A. Site and Location Map

PERMIT STREAMLINING ACT DEADLINE:
N/A

RECOMMENDED ACTION:
IT IS RECOMMENDED THAT THE COMMISSION:

CEQA FINDING:
FIND THAT THE ACTIVITY IS EXEMPT FROM THE REQUIREMENTS OF THE CEQA PURSUANT TO TITLE 14, CALIFORNIA CODE OF REGULATIONS, SECTION 15061 AS A CATEGORICALLY EXEMPT PROJECT, CLASS 1, EXISTING FACILITIES; TITLE 2, CALIFORNIA CODE OF REGULATIONS, SECTION 2905 (a) (2).

SIGNIFICANT LANDS INVENTORY FINDING:
FIND THAT THIS ACTIVITY IS CONSISTENT WITH THE USE CLASSIFICATION DESIGNATED BY THE COMMISSION FOR THE LAND PURSUANT TO PUBLIC RESOURCES CODE SECTIONS 6370, ET SEQ.

AUTHORIZATION:

AUTHORIZE ISSUANCE TO GRANT B. HIESHIMA AND DONNA M. HIESHIMA OF A TEN-YEAR RECREATIONAL PIER LEASE, BEGINNING APRIL 21, 1998, FOR CONTINUED USE AND MAINTENANCE OF A PIER, BOAT LIFT, AND TWO MOORING BUOYS ON THE LAND SHOWN ON EXHIBIT A ATTACHED AND BY THIS REFERENCE MADE A PART HEREOF; NO MONETARY CONSIDERATION PURSUANT TO PUBLIC RESOURCES CODE SECTION 6503.5; LIABILITY INSURANCE IN THE AMOUNT OF NO LESS THAN $300,000.

NO SCALE

SITE MAP

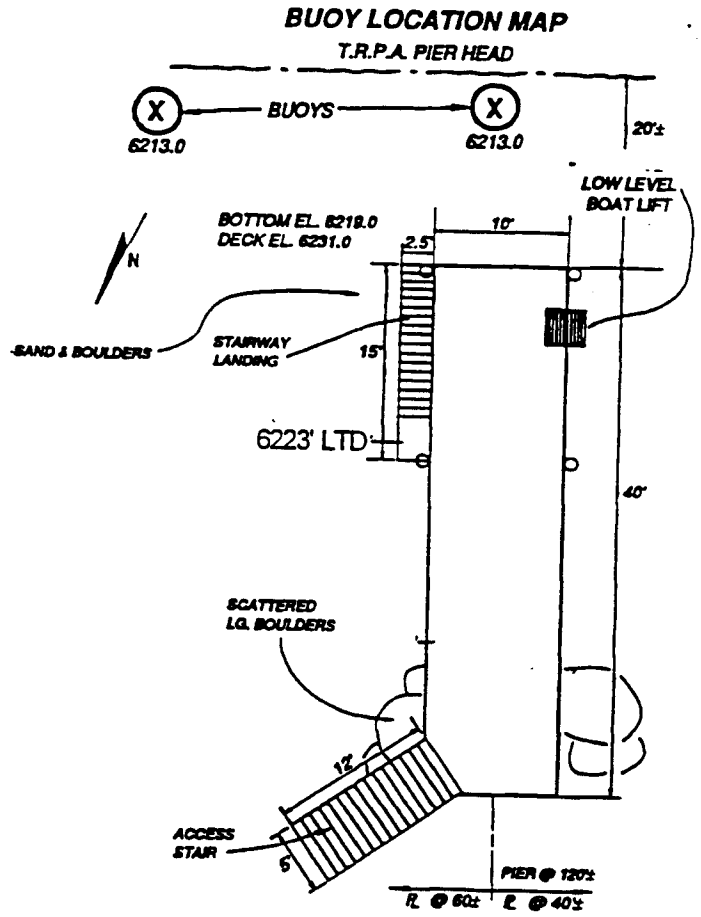

8321 Meeks Bay Avenue

NO SCALE

LOCATION MAP

Lake Tahoe

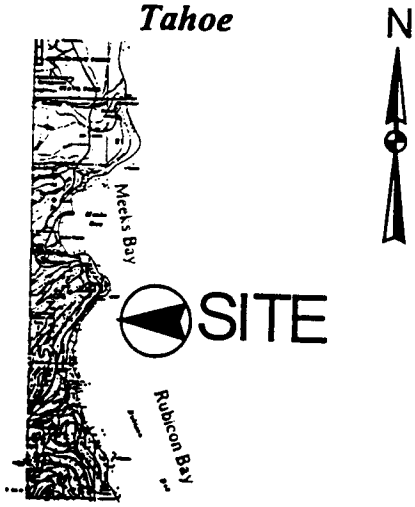

Exhibit A
PRC 7513
APN 016-063-111
Lake Tahoe
EL DORADO COUNTY

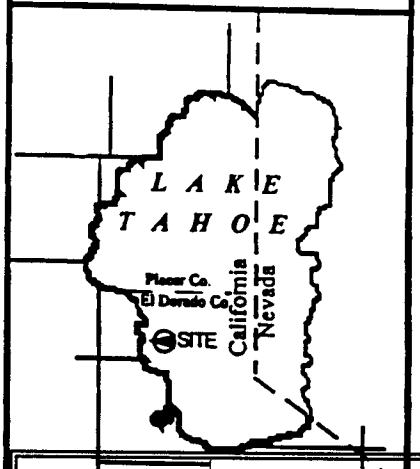

This Exhibit is solely for purposes of generally defining the lease premises, and is not intended to be, nor shall it be construed as, a waiver or limitation of any State interest in the subject or any other property.