MINUTE ITEM
This Calendar Item No. C55
was approved as Minute Item
No. 55 by the State Lands
Commission by a vote of 3
to 0 at its 2-5-01
meeting.

CALENDAR ITEM
C55

A 6

S 3

02/05/01
WP 8050.1
F. Singer

AMENDMENT OF LEASE

LESSEE:

Universal Portfolio Limited
Post Office Box 4697
Petaluma, California 94955

AREA, LAND TYPE, AND LOCATION:

0.024 acres, more or less, of sovereign lands in the Petaluma River, near the city of Petaluma, Sonoma County.

AUTHORIZED USE:

Construction, use and maintenance of a floating boat dock, ramp, landing pad, and pier.

LEASE TERM:

Ten years, beginning August 1, 1998.

CONSIDERATION:

$107 per year with the State reserving the right to fix a different rent periodically during the lease term, as provided in the lease.

PROPOSED AMENDMENT:

1. The previously authorized seven foot by sixteen foot dock and the seven foot by thirty-two foot dock will be deleted as authorized improvements and replaced with an authorized ten foot by thirty-two foot floating boat dock.

2. The land description incorporated in Lease PRC 8050.1 will be deleted and replaced by the land description incorporated herein as Exhibit A.

3. The annual rent will be revised from $107 to $115 per year. All other terms and conditions of the lease shall remain in effect without amendment.

OTHER PERTINENT INFORMATION:

1. On December 16, 1998, the Commission authorized a General Lease - Recreational Use with Universal Portfolio Limited for the reconstruction of a floating boat dock, ramp, and pier. That lease will expire on September 30, 2008. The authorized improvements do not extend far enough into the Petaluma River for Applicant to utilize and enjoy the facilities. Applicant owns the uplands adjoining the lease premises, but does not qualify for a rent-free lease because it is not a natural person or association of homeowners. Universal Portfolio Limited seeks to extend the pier 20 feet farther into the river and to modify the configuration of the floating boat dock to a 10 foot by 32 foot floating dock.

2. Pursuant to the Commission's delegation of authority and the State CEQA Guidelines (Title 14, California Code of Regulations, section 15061), the staff has determined that this activity is exempt from the requirements of the CEQA as a categorically exempt project. The project is exempt under Class 2, Replacement or Reconstruction; Title 2, California Code of Regulations, section 2905 (b).

   Authority: Public Resources Code section 21084 and Title 14, California Code of Regulations, section 15300 and Title 2, California Code of Regulations, section 2905.

3. This activity involves lands identified as possessing significant environmental values pursuant to Public Resources Code sections 6370, et seq. Based upon the staff's consultation with the persons nominating such lands and through the CEQA review process, it is the staff's opinion that the project, as proposed, is consistent with its use classification.

APPROVALS OBTAINED:

United States Army Corps of Engineers, Sonoma County, California Regional Water Quality Control Board

FURTHER APPROVALS REQUIRED:

California Department of Fish and Game, San Francisco Bay Conservation and Development Commission

EXHIBITS:

A. Site Map
B. Location Map

PERMIT STREAMLINING ACT DEADLINE:

N/A

RECOMMENDED ACTION:

IT IS RECOMMENDED THAT THE COMMISSION:

CEQA FINDING:

FIND THAT THE ACTIVITY IS EXEMPT FROM THE REQUIREMENTS OF THE CEQA PURSUANT TO TITLE 14, CALIFORNIA CODE OF REGULATIONS, SECTION 15061 AS A CATEGORICALLY EXEMPT PROJECT, CLASS 2, REPLACEMENT OR RECONSTRUCTION; TITLE 2, CALIFORNIA CODE OF REGULATIONS, SECTION 2905 (b).

SIGNIFICANT LANDS INVENTORY FINDING:

FIND THAT THIS ACTIVITY IS CONSISTENT WITH THE USE CLASSIFICATION DESIGNATED BY THE COMMISSION FOR THE LAND PURSUANT TO PUBLIC RESOURCES CODE SECTIONS 6370, ET SEQ.

AUTHORIZATION:

AUTHORIZE THE AMENDMENT OF LEASE NO. PRC 8050.1, A GENERAL LEASE - RECREATIONAL USE TO: 1)INCORPORATE THE LANDS SHOWN ON EXHIBIT A ATTACHED AND BY THIS REFERENCE MADE A PART HEREOF; 2) TO EXTEND THE PIER BY 20 FEET AND CONSTRUCT A 10 FOOT BY 32 FOOT FLOATING BOAT DOCK; AND, 3) INCREASE THE ANNUAL RENT TO $115 PER YEAR WITH THE STATE RESERVING THE RIGHT AT ANY TIME TO SET A MONETARY RENT IF THE COMMISSION FINDS SUCH ACTION TO BE IN THE STATE'S BEST INTEREST; ALL OTHER TERMS AND CONDITIONS OF THE LEASE WILL REMAIN IN EFFECT WITHOUT AMENDMENT.

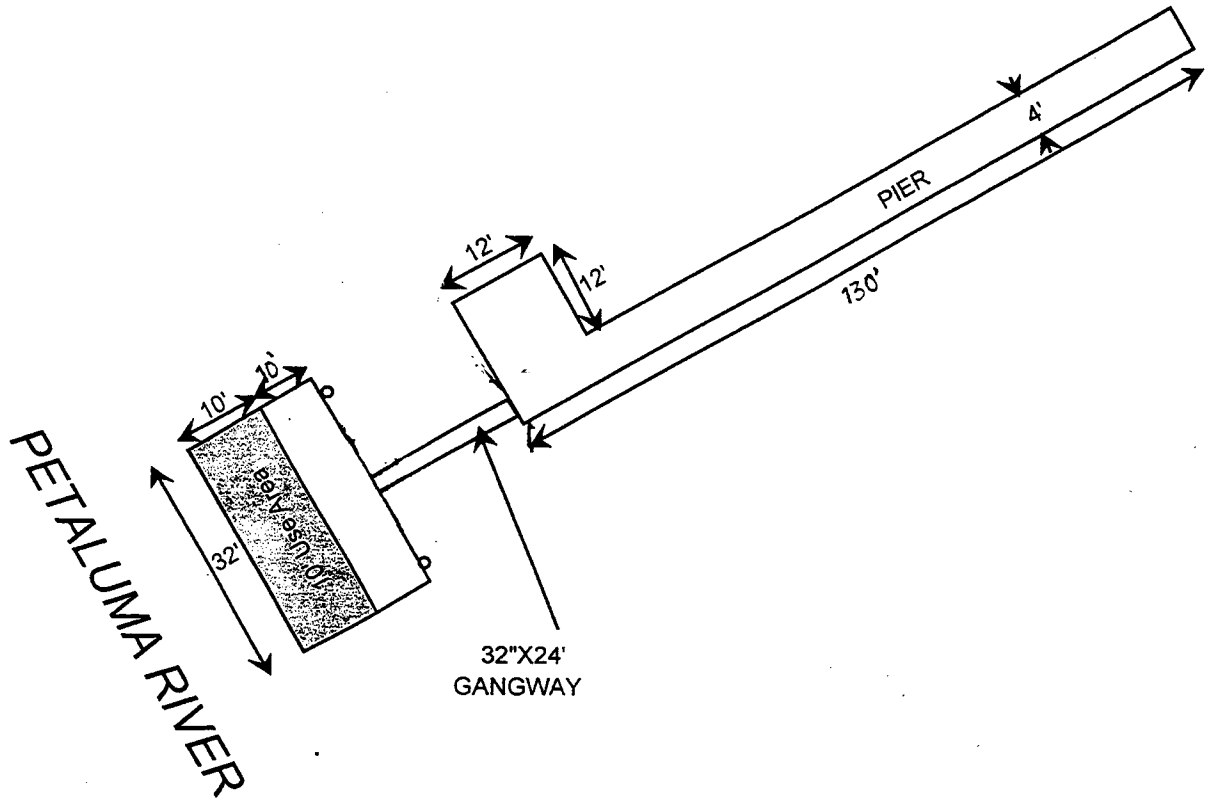

EXHIBIT "A"
Site Map

Universal Portfolio LTD
Recreational Lease
PETALUMA RIVER
SONOMA COUNTY

This Exhibit is solely for purposes of generally defining the lease premises, and is not intended to be, nor shall it be construed as, a waiver or limitation of any State interest in the subject or any other property.

CALENDAR PAGE 000297
MINUTE PAGE 000324

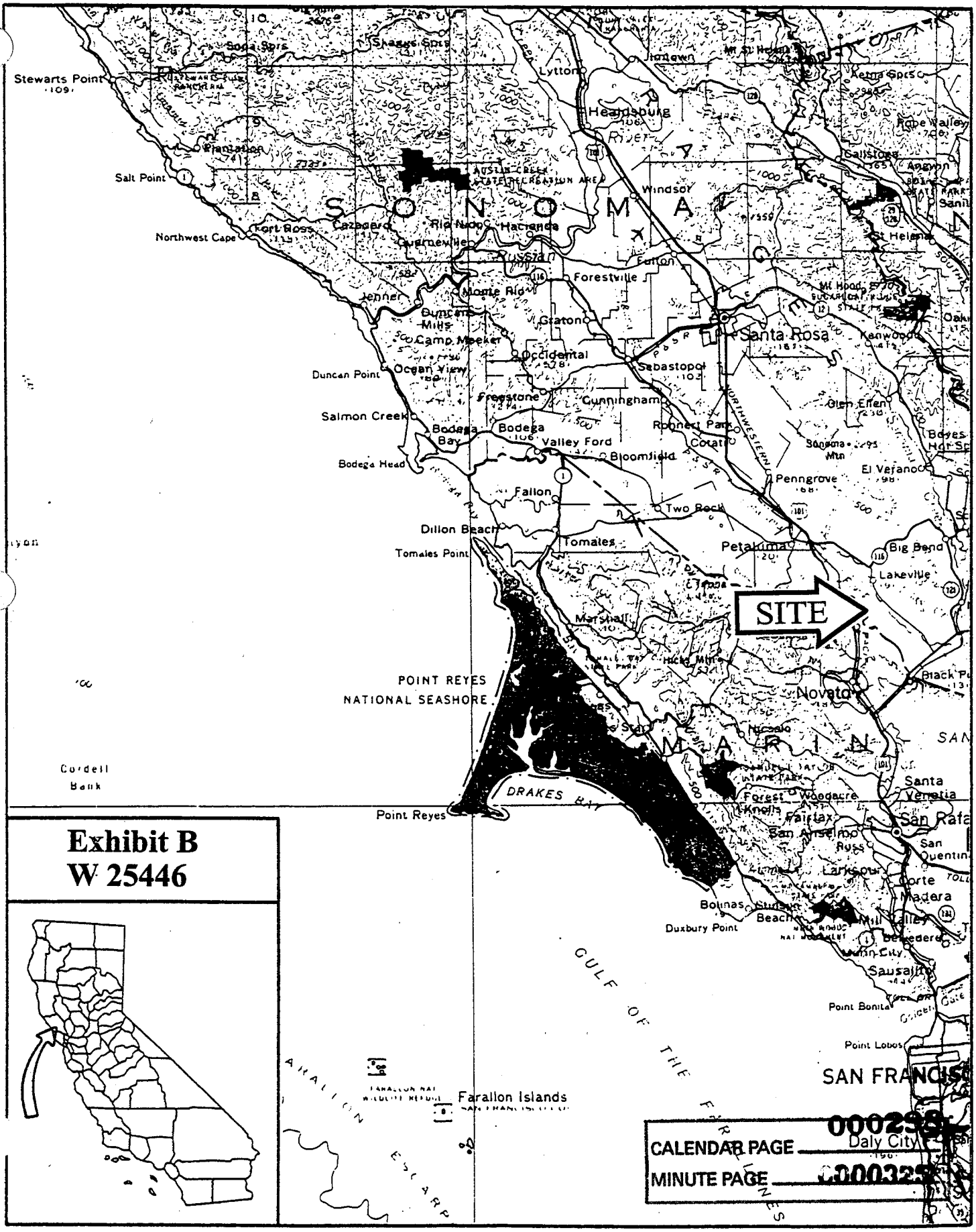

Exhibit B
W 25446