MINUTE ITEM
This Calendar Item No. C45 was approved as Minute Item No. 45 by the California State Lands Commission by a vote of 3 to Ø at its 4-9-02 meeting.

CALENDAR ITEM
C45

A 4

S 1

04/09/ 02
PRC 4896.1
B. Young

CONTINUATION OF RENT

LESSEES:
Dean F. Unger and Margaret Z. Unger

AREA, LAND TYPE, AND LOCATION:
0.05 acres, more or less, of sovereign lands in Lake Tahoe, Cedar Flat, Placer County.

AUTHORIZED USE:
Continued use and maintenance of an existing pier and boat hoist and one mooring buoy as shown on the attached Exhibit A.

LEASE TERM:
Ten years, beginning March 1, 1997.

CONSIDERATION:
This lease provides that Lessor may modify the rent periodically during the lease term for the pier and boat hoist and one mooring buoy. Pursuant to this provision, staff has conducted a review of the rent under this lease, and recommends that the rent be continued at $333 per year, effective March 1, 2002.

EXHIBIT:
A. Site and Location Map

RECOMMENDED ACTION:
IT IS RECOMMENDED THAT THE COMMISSION:

CEQA FINDING:
FIND THAT THE ACTIVITY IS NOT SUBJECT TO THE REQUIREMENTS OF THE CEQA PURSUANT TO TITLE 14,

CALIFORNIA CODE OF REGULATIONS, SECTION 15060(c)(3) BECAUSE THE ACTIVITY IS NOT A PROJECT AS DEFINED BY PUBLIC RESOURCES CODE SECTION 21065 AND TITLE 14, CALIFORNIA CODE OF REGULATIONS, SECTION 15378.

AUTHORIZATION:

APPROVE THE CONTINUATION OF RENT FOR LEASE NO. PRC 4896.1 AT $333 PER YEAR, EFFECTIVE MARCH 1, 2002.

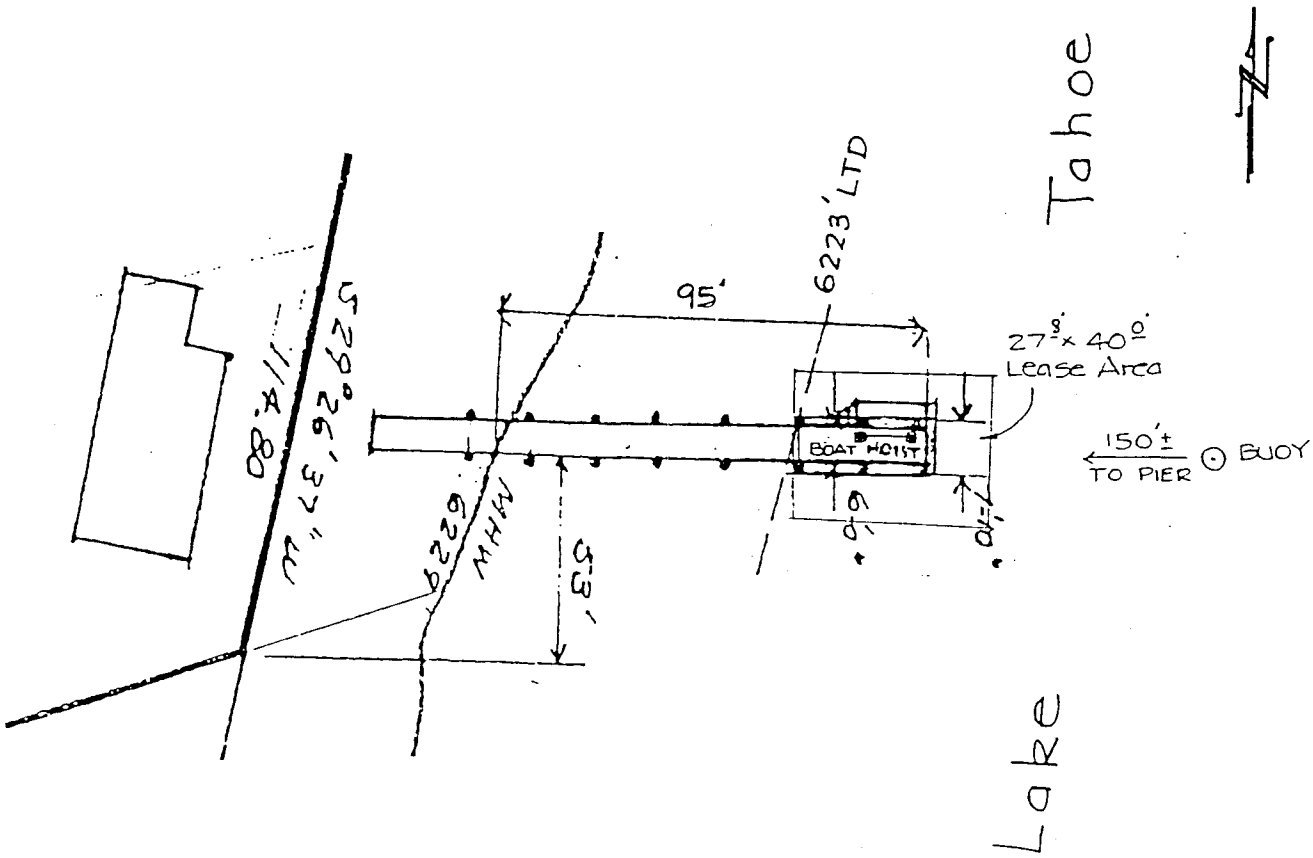

4320 North Lake Blvd.

NO SCALE

LOCATION MAP

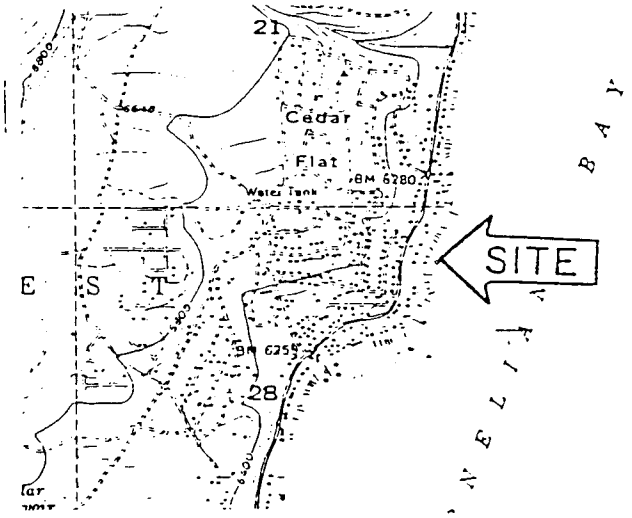

Lake Tahoe

NO SCALE

EXHIBIT A

PRC 4896.1

APN 92 - 180 - 013

Lake Tahoe

PLACER COUNTY

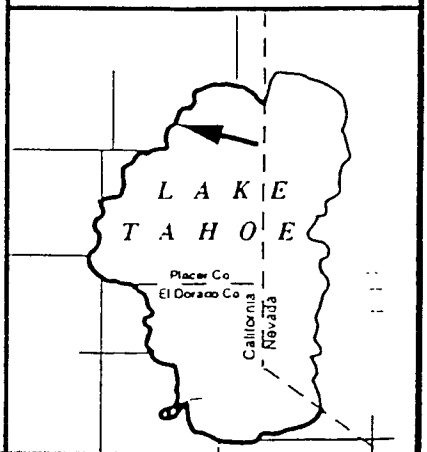

This exhibit is solely for purposes of generally defining the lease premises, is based on unverified information provided by lessee or other parties, and is not intended to be, nor shall it be construed to as a waiver or limitation of any state interest in the subject or any other property.

CALENDAR PAGE 000243

CG 5/97

MINUTE PAGE 000848