MINUTE ITEM
This Calendar Item No. C46 was approved as Minute Item No. 46 by the California State Lands Commission by a vote of 3 to 0 at its 10-01-02 meeting.

# CALENDAR ITEM
# C46

A 3

S 1

PRC 7372.1

10/01/02
WP 7372.1
B. Young

## GENERAL LEASE-RECREATIONAL USE

**APPLICANTS:**
Georgia L. Poppin and Jennifer L. Seibold

**AREA, LAND TYPE, AND LOCATION:**
0.02 acres, more or less, of sovereign lands in Eagle Lake near Susanville, Lassen County.

**AUTHORIZED USE:**
Continued use and maintenance of an existing portable pier in Eagle Lake as shown on the attached Exhibit A.

**LEASE TERM:**
Ten years, beginning September 1, 2002.

**CONSIDERATION:**
$229 per annum; with the State reserving the right to fix a different rent periodically during the lease term, as provided in the lease.

**SPECIFIC LEASE PROVISIONS:**
Combined single limit coverage of $1,000,000.

**OTHER PERTINENT INFORMATION:**

1. On January 30, 1989, the Commission authorized a General Lease - Recreational Use to George Dotson and Breta Dotson. George Dotson and Breta Dotson have passed away. The property was transferred to their daughters Georgia L. Poppin and Jennifer L. Seibold. Applicants do not qualify for a rent-free lease because applicants are not littoral owners. The upland property is U.S. Forest Service land of the Eagle Nest recreational residence tract. Georgia L. Poppin and Jennifer L. Seibold are now applying for a new General Lease - Recreational Use.

2. Pursuant to the Commission's delegation of authority and the State CEQA Guidelines (Title 14, California Code of Regulations, section 15061), the staff has determined that this activity is exempt from the requirements of the CEQA as a categorically exempt project. The project is exempt under Class 1, Existing Facilities; Title 2, California Code of Regulations, section 2905 (a)(2).

   Authority: Public Resources Code section 21084 and Title 14, California Code of Regulations, section 15300 and Title 2, California Code of Regulations, section 2905.

3. This activity involves lands identified as possessing significant environmental values pursuant to Public Resources Code sections 6370, et seq. Based upon the staff's consultation with the persons nominating such lands and through the CEQA review process, it is the staff's opinion that the project, as proposed, is consistent with its use classification.

**EXHIBIT:**

A. Location and site map

**PERMIT STREAMLINING ACT DEADLINE:**

N/A

**RECOMMENDED ACTION:**

IT IS RECOMMENDED THAT THE COMMISSION:

**CEQA FINDING:**

FIND THAT THE ACTIVITY IS EXEMPT FROM THE REQUIREMENTS OF THE CEQA PURSUANT TO TITLE 14, CALIFORNIA CODE OF REGULATIONS, SECTION 15061 AS A CATEGORICALLY EXEMPT PROJECT, CLASS 1, EXISTING FACILITIES; TITLE 2, CALIFORNIA CODE OF REGULATIONS, SECTION 2905 (a)(2).

**SIGNIFICANT LANDS INVENTORY FINDING:**

FIND THAT THIS ACTIVITY IS CONSISTENT WITH THE USE CLASSIFICATION DESIGNATED BY THE COMMISSION FOR THE LAND PURSUANT TO PUBLIC RESOURCES CODE SECTIONS 6370, ET SEQ.

**AUTHORIZATION:**

AUTHORIZE ISSUANCE TO GEORGIA L. POPPIN AND JENNIFER L. SEIBOLD OF A GENERAL LEASE-RECREATIONAL USE, BEGINNING SEPTEMBER 1, 2002, FOR A TERM OF TEN YEARS, FOR CONTINUED USE AND MAINTENANCE OF AN EXISTING PORTABLE PIER ON THE LAND SHOWN ON EXHIBIT A ATTACHED AND BY THIS REFERENCE MADE A PART HEREOF; CONSIDERATION BEING $229 PER ANNUM WITH THE STATE RESERVING THE RIGHT TO FIX A DIFFERENT RENT PERIODICALLY DURING THE LEASE TERM, AS PROVIDED IN THE LEASE; COMBINED SINGLE LIMIT LIABILITY INSURANCE WITH COVERAGE OF NO LESS THAN $1,000,000.

# SITE MAP

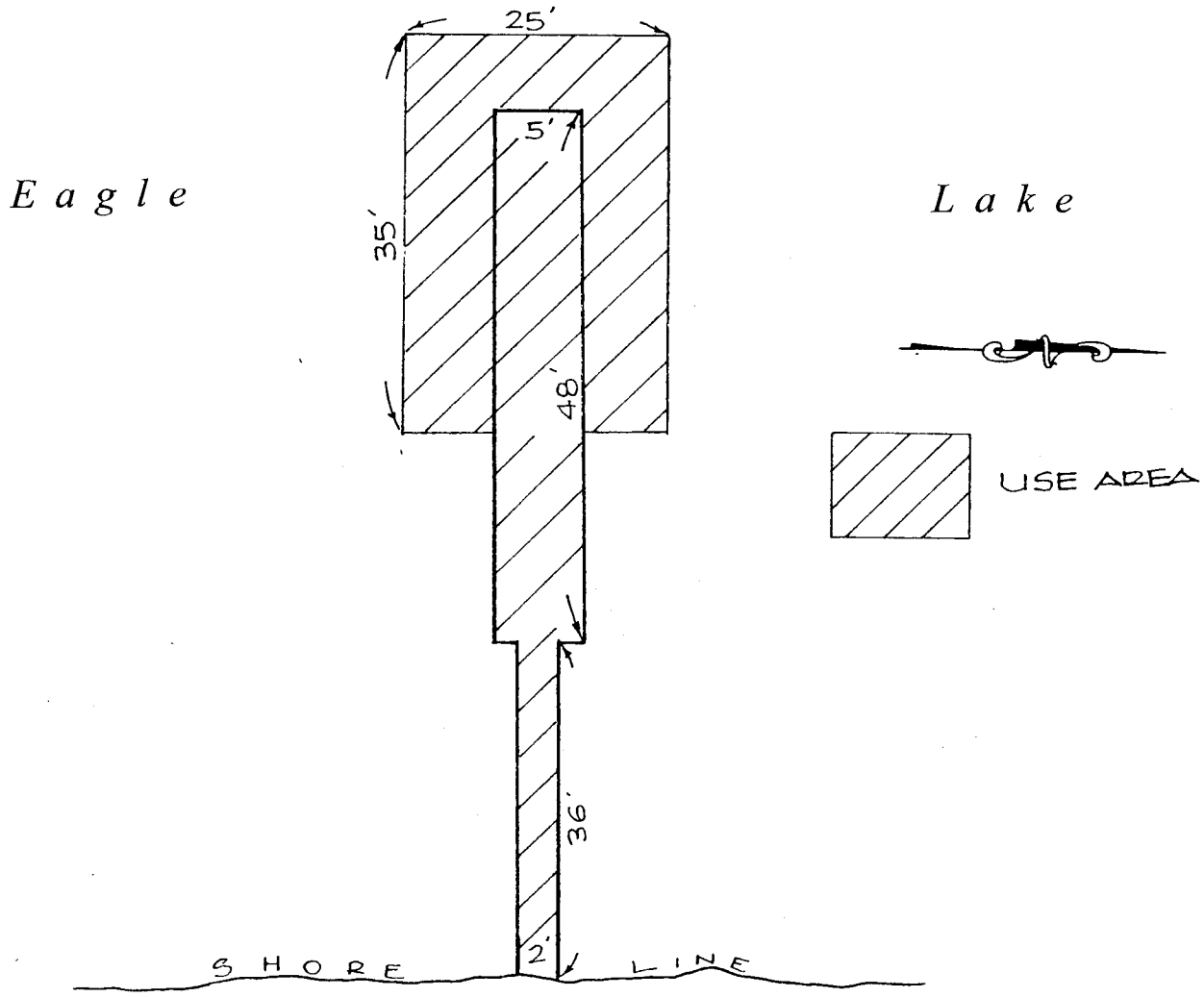


NW1/4 of NW1/4 of Section 4, T31N, R11E, MDM

# LOCATION MAP

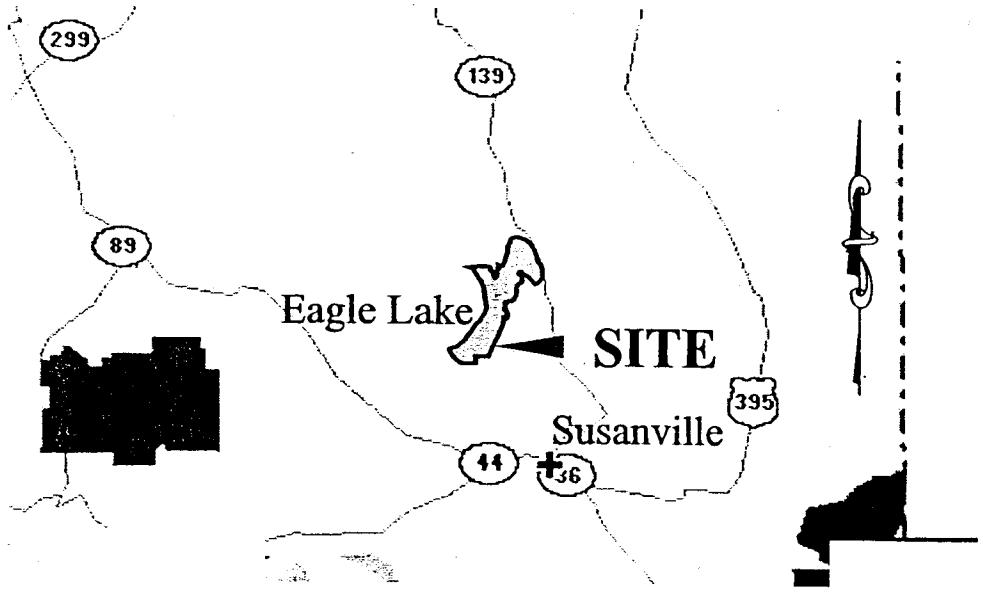


**EXHIBIT A**
**PRC 7372.1**
**APN 89-030-010**
**Eagle Lake**
**Lassen County**

This exhibit is solely for purposes of generally defining the lease premises, is based on unverified information provided by lessee or other parties, and is not intended to be, nor shall it be construed to as a waiver or limitation of any state interest in the subject or any other property.

000219

CALENDAR PAGE

001918

MINUTE PAGE

BY 3/02