MINUTE ITEM
This Calendar Item No. C41 was approved as Minute Item No. 41 by the California State Lands Commission by a vote of 3 to 0 at its 2-21-03 meeting.

CALENDAR ITEM
C41

A 3 | 02/21/03
PRC 7371 | WP 7371.1
S 1 | B. Young

GENERAL LEASE-RECREATIONAL USE

APPLICANTS:
Dale R. Elder and Cora R. Elder

AREA, LAND TYPE, AND LOCATION:
0.03 acres, more or less, of sovereign lands in Eagle Lake near Susanville, Lassen County.

AUTHORIZED USE:
Continued use and maintenance of an existing portable pier in Eagle Lake as shown on the attached Exhibit A.

LEASE TERM:
Ten years, beginning January 1, 2003.

CONSIDERATION:
$288 per year; with the State reserving the right to fix a different rent periodically during the lease term, as provided in the lease.

SPECIFIC LEASE PROVISIONS:
Insurance:
Liability insurance with coverage of no less than $500,000.

OTHER PERTINENT INFORMATION:

1. On January 17, 1990, the Commission authorized a General Lease - Recreational Use to James A. Walker. That lease expired on November 30, 1999. Applicants purchased the property from James A. Walker on March 15, 2002, and are now applying for a new General Lease - Recreational Use.

2. Applicants do not qualify for a rent-free lease because Applicants are not littoral owners. The upland property is U.S. Forest Service land of the Eagle Nest recreational residence tract. Applicants have obtained a Special Use Permit from the U.S. Forest Service for the use of the upland property.

3. Pursuant to the Commission's delegation of authority and the State CEQA Guidelines (Title 14, California Code of Regulations, section 15061), the staff has determined that this activity is exempt from the requirements of the CEQA as a categorically exempt project. The project is exempt under Class 1, Existing Facilities; Title 2, California Code of Regulations, section 2905 (a)(2).

   Authority: Public Resources Code section 21084 and Title 14, California Code of Regulations, section 15300 and Title 2, California Code of Regulations, section 2905.

4. This activity involves lands identified as possessing significant environmental values pursuant to Public Resources Code sections 6370, et seq. Based upon the staff's consultation with the persons nominating such lands and through the CEQA review process, it is the staff's opinion that the project, as proposed, is consistent with its use classification.

EXHIBIT:

A. Location and Site Map

PERMIT STREAMLINING ACT DEADLINE:

N/A

RECOMMENDED ACTION:

IT IS RECOMMENDED THAT THE COMMISSION:

CEQA FINDING:

FIND THAT THE ACTIVITY IS EXEMPT FROM THE REQUIREMENTS OF THE CEQA PURSUANT TO TITLE 14, CALIFORNIA CODE OF REGULATIONS, SECTION 15061 AS A CATEGORICALLY EXEMPT PROJECT, CLASS 1, EXISTING FACILITIES; TITLE 2, CALIFORNIA CODE OF REGULATIONS, SECTION 2905 (a)(2).

SIGNIFICANT LANDS INVENTORY FINDING:

FIND THAT THIS ACTIVITY IS CONSISTENT WITH THE USE CLASSIFICATION DESIGNATED BY THE COMMISSION FOR THE LAND PURSUANT TO PUBLIC RESOURCES CODE SECTIONS 6370, ET SEQ.

AUTHORIZATION:

AUTHORIZE ISSUANCE TO DALE R. ELDER AND CORA R. ELDER OF A GENERAL LEASE - RECREATIONAL USE, BEGINNING JANUARY 1, 2003, FOR A TERM OF TEN YEARS, FOR THE CONTINUED USE AND MAINTENANCE OF AN EXISTING PORTABLE PIER ON THE LAND SHOWN ON EXHIBIT A ATTACHED AND BY THIS REFERENCE MADE A PART HEREOF; ANNUAL RENT IN THE AMOUNT OF $288 WITH THE STATE RESERVING THE RIGHT TO FIX A DIFFERENT RENT PERIODICALLY DURING THE LEASE TERM, AS PROVIDED IN THE LEASE; LIABILITY INSURANCE FOR COMBINED SINGLE LIMIT COVERAGE OF NO LESS THAN $500,000.

NO SCALE

SITE MAP

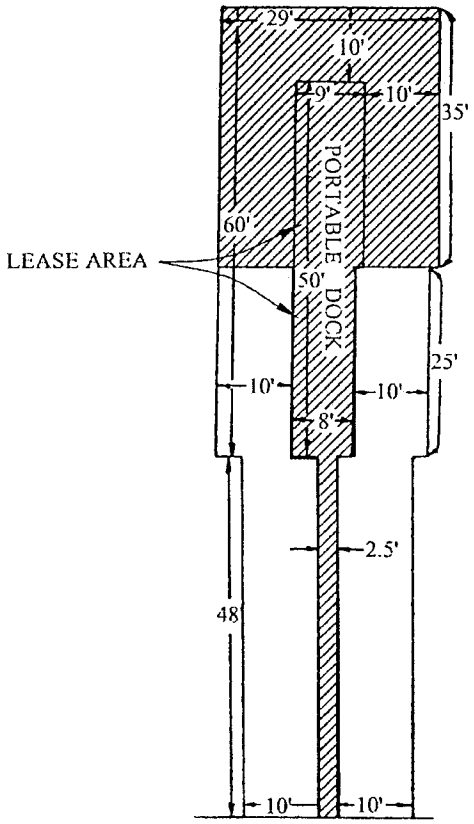

Eagles Nest Lot 27, Eagle Lake

NO SCALE

LOCATION MAP

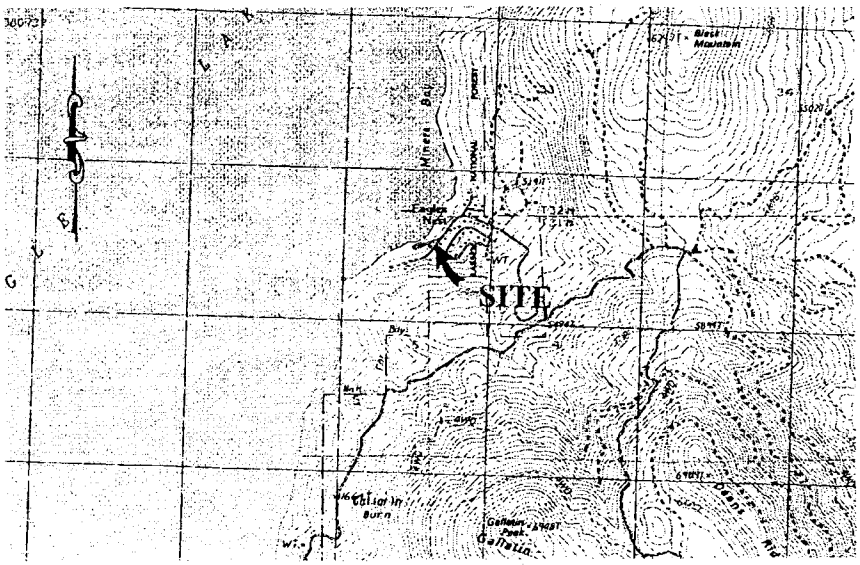

This Exhibit is solely for purposes of generally defining the lease premises, is based on unverified information provided by Lessee or other parties, and is not intended to be, nor shall it be construed as a waiver or limitation of any state interest in the subject or any other property.

EXHIBIT A

PRC 7371.1
APN 089-030-10
Eagle Lake
LASSEN COUNTY

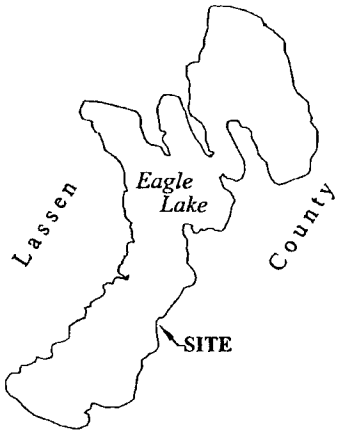

MJJ 10-29-01