MINUTE ITEM
This Calendar Item No. 62 was approved as Minute Item No. 62 by the California State Lands Commission by a vote of 2 to 1 at its 06/28/07 meeting.

Minute Item
62

06/28/07
WP 5065
V. Caldwell

EVERETT G. NORD AND GRETTA L. NORD (LESSEES); ROBERT L. VELLANOWETH AND KELLY A. VELLANOWETH (APPLICANTS)

Regular Item 62: The Commission listened to a staff presentation on the consideration of a lease concerning construction of a covered floating boathouse with a second-story deck and handrail. The item was approved by a vote of 2-1.

CALENDAR ITEM
62

A 9

S 6

06/28/07
WP 5065.9
V. Caldwell

TERMINATION OF RECREATIONAL PIER LEASE AND ISSUANCE OF A NEW RECREATIONAL PIER LEASE

LESSEES:
Everett G. Nord and Greta L. Nord

APPLICANTS:
Robert L. Vellanoweth and Kelly A. Vellanoweth

AREA, LAND TYPE, AND LOCATION:
Sovereign lands in the Sacramento River, near the city of Sacramento, Sacramento County.

AUTHORIZED USE:
Construction, use, and maintenance of a new single-story covered floating boat dock with a pitched roof, boat slip, boat lift, and three new steel pilings; and the continued use and maintenance of an existing gangway, and three wood pilings.

LEASE TERM:
Ten years, beginning June 28, 2007.

CONSIDERATION:
No monetary consideration pursuant to Public Resources Code section 6503.5.

SPECIFIC LEASE PROVISIONS:
Liability insurance in the amount of no less than $300,000.

OTHER PERTINENT INFORMATION:

1. Applicants own the uplands adjoining the lease premises.

2. On September 19, 2000, the Commission authorized a ten-year Recreational Pier Lease to Everett G. Nord and Greta L. Nord.

000352 CALENDAR PAGE
001777 MINUTE PAGE

That lease will expire on September 19, 2010. Subsequently, the ownership of the upland has been transferred to Robert L. Vellanoweth and Kelly A. Vellanoweth (Applicants).

3. On January 2, 2005, the Applicants submitted an application for the removal of the existing boat dock and for the construction of a 24' x 46' two story floating dock, a 12' x 36' boat slip, boatlift and installation of three steel pilings. The dock will be anchored by three new steel pilings and three existing wood pilings (one single and one dolphin). Access to the floating dock will be provided via an existing gangway with new aluminum decking. Based on the plans submitted with the application, the boat dock and slip will be covered. As designed, the roof over the boat dock and slip will be flat and will have a 36" high picket railing around the entire second story, which would provide a deck area for the Applicants use.

4. Based on the staff's review of the plans, staff believes the two-story dock is not consistent with the Commission's rules and regulations for a Recreational Pier Lease or a General Lease - Recreational Use. As such, staff has advised the Applicants to redesign the upper level of the covered boat dock to remove the railing and flat roof, which would be replaced with a pitched roof.

5. Since the design of the boat dock has been modified, the Applicants may not begin construction activities until all applicable permits are amended from the agencies having jurisdiction over the project, and copies of such permit amendments are provided to the Commission.

6. The Applicants qualify for a rent free single-story Recreational Pier Lease because they are natural persons who have improved the littoral land with, and use the upland for, a single-family dwelling.

7. **Termination of Existing Lease:** Pursuant to the Commission's delegation of authority and the State CEQA Guidelines (Title 14, California Code of Regulations, section 15060) (c)(3), the staff has determined that this activity is not subject to the provisions of the CEQA because it is not a "project" as defined by the CEQA and the State CEQA Guidelines.

   Authority: Public Resources Code section 21065 and Title 14, California Code of Regulations, section 15060 (c)(3) and 15378.

8. **Existing Gangway and Three Wood Pilings:** Pursuant to the Commission's delegation of authority and the State CEQA Guidelines (Title 14, California Code of Regulations, section 15061), the staff has determined that this activity is exempt from the requirements of the CEQA as a categorically exempt project. The project is exempt under Class 1, Existing Facilities; Title 2, California Code of Regulations, section 2905 (a)(2).

   Authority: Public Resources Code section 21084 and Title 14, California Code of Regulations, section 15300 and Title 2, California Code of Regulations, section 2905.

9. **Single Story Covered Floating Boat Dock with a Pitched Roof and Boat Lift, and Three Steel Pilings:** Pursuant to the Commission's delegation of authority and the State CEQA Guidelines (Title 14, California Code of Regulations, section 15061), the staff has determined that this activity is exempt from the requirements of the CEQA as a categorically exempt project. The project is exempt under Class 3, New Construction of Small Structures; Title 2, California Code of Regulations, section 2905 (c)(1).

   Authority: Public Resources Code section 21084 and Title 14, California Code of Regulations, section 15300 and Title 2, California Code of Regulations, section 2905.

10. This activity involves lands identified as possessing significant environmental values pursuant to Public Resources Code sections 6370, et seq. Based upon the staff's consultation with the persons nominating such lands and through the CEQA review process, it is the staff's opinion that the project, as proposed, is consistent with its use classification.

APPROVALS OBTAINED:

U.S. Army Corps of Engineers, NOAA Fisheries, the U.S. Fish and Wildlife Service, The Reclamation Board, California Department of Fish and Game, and the California Regional Water Quality Control Board

EXHIBIT:

A. Site and Location Map

RECOMMENDED ACTION:
IT IS RECOMMENDED THAT THE COMMISSION:

CEQA FINDING:

TERMINATION OF EXISTING LEASE: FIND THAT THE ACTIVITY IS NOT SUBJECT TO THE REQUIREMENTS OF THE CEQA PURSUANT TO TITLE 14, CALIFORNIA CODE OF REGULATIONS, SECTION 15060 (c)(3) BECAUSE THE ACTIVITY IS NOT A PROJECT AS DEFINED BY PUBLIC RESOURCE CODE SECTION 21065 AND TITLE 14, CALIFORNIA CODE OF REGULATIONS, SECTION 15378.

EXISTING GANGWAY AND THREE WOOD PILINGS: FIND THAT THE ACTIVITY IS EXEMPT FROM THE REQUIREMENTS OF THE CEQA PURSUANT TO TITLE 14, CALIFORNIA CODE OF REGULATIONS, SECTION 15061 AS A CATEGORICALLY EXEMPT PROJECT, CLASS 1, EXISTING FACILITIES; TITLE 2, CALIFORNIA CODE OF REGULATIONS, SECTION 2905 (a)(2).

SINGLE STORY COVERED FLOATING BOAT DOCK WITH A PITCHED ROOF AND BOAT LIFT AND THREE STEEL PILINGS: FIND THAT THE ACTIVITY IS EXEMPT FROM THE REQUIREMENTS OF THE CEQA PURSUANT TO TITLE 14, CALIFORNIA CODE OF REGULATIONS, SECTION 15061 AS A CATEGORICALLY EXEMPT PROJECT, CLASS 3, NEW CONSTRUCTION OF SMALL STRUCTURES; TITLE 14, CALIFORNIA CODE OF REGULATIONS, SECTION 15303.

SIGNIFICANT LANDS INVENTORY FINDING:
FIND THAT THIS ACTIVITY IS CONSISTENT WITH THE USE CLASSIFICATION DESIGNATED BY THE COMMISSION FOR THE LAND PURSUANT TO PUBLIC RESOURCES CODE SECTIONS 6370, ET SEQ.

AUTHORIZATION:

1. AUTHORIZE TERMINATION, EFFECTIVE JUNE 27, 2007, OF LEASE NO. PRC 5065.9 A RECREATIONAL PIER LEASE, ISSUED TO EVERETT G. NORD AND GRETA L. NORD.

2. AUTHORIZE ISSUANCE TO ROBERT L. VELLANOWETH AND KELLY A. VELLANOWETH, OF A TEN-YEAR RECREATIONAL

PIER LEASE, BEGINNING JUNE 28, 2007, FOR THE CONSTRUCTION OF A SINGLE STORY FLOATING BOAT DOCK WITH PITCHED ROOF AND BOAT LIFT, AND THREE STEEL PILINGS, AND THE CONTINUED USE AND MAINTENANCE OF AN EXISTING GANGWAY AND THREE WOOD PILINGS AS SHOWN ON EXHIBIT A ATTACHED AND BY THIS REFERENCE MADE A PART HEREOF; NO MONETARY CONSIDERATION PURSUANT TO PUBLIC RESOURCES CODE SECTION 6503.5; LIABILTY INSURANCE WITH COVERAGE OF NO LESS THAN $300,000.

NO SCALE

SITE

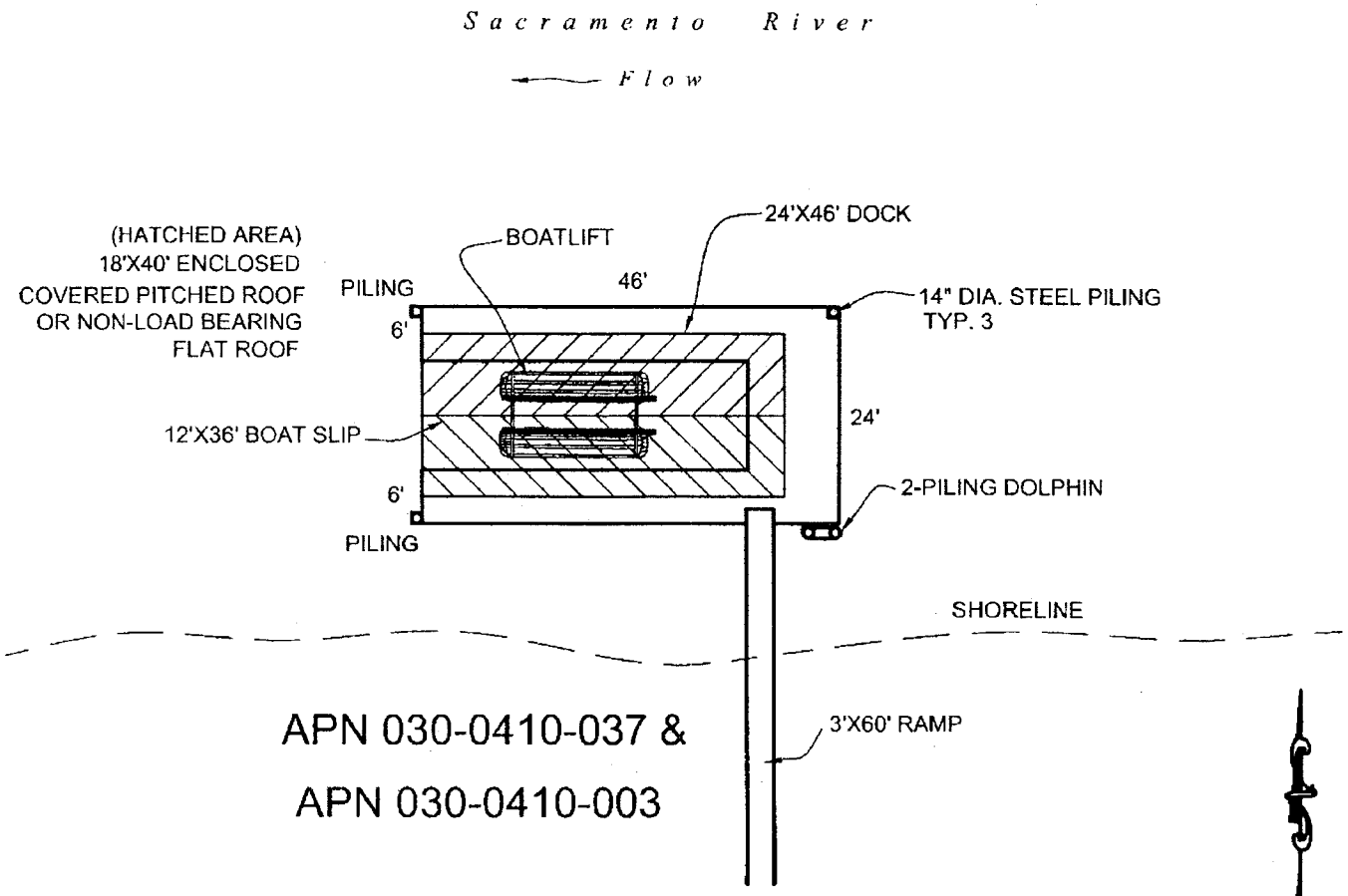

674 RIVERLAKE WAY, SACRAMENTO

NO SCALE

LOCATION

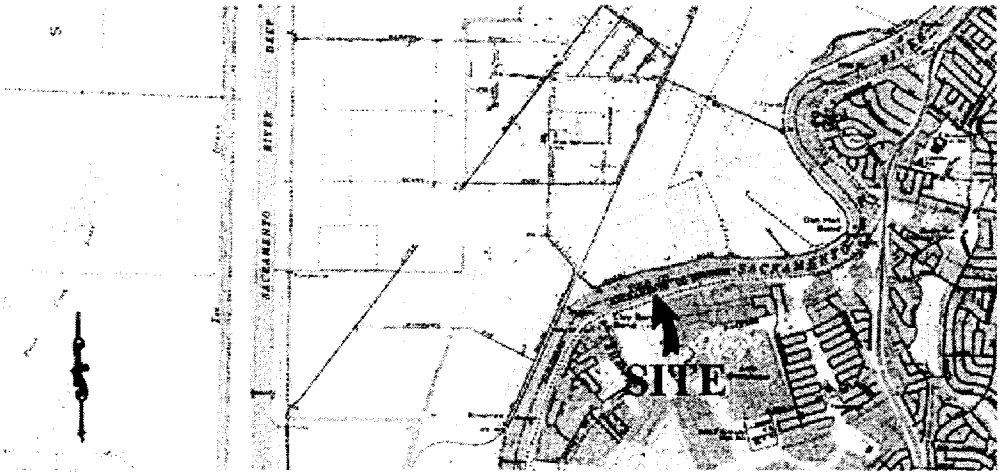

MAP SOURCE: USGS QUAD

This Exhibit is solely for purposes of generally defining the lease premises, is based on unverified information provided by the Lessee or other parties and is not intended to be, nor shall it be construed as, a waiver or limitation of any State interest in the subject or any other property.

Exhibit A

PRC 5065.9
VELLANOWETH
APN 030-0410-003, & 037
RECREATIONAL PIER
SACRAMENTO CO.

MJ 04/07