W 40807

EXHIBIT D

MEMORANDUM OF AGREEMENT

ON

MEASUREMENT AND ALLOCATION WITH SURFACE COMMINGLING OF OIL AND GAS PRODUCTION FROM THE POINT PEDERNALES UNIT, THE TRANQUILLON RIDGE UNIT AND CALIFORNIA STATE LANDS TRANQUILLON RIDGE AREA

BETWEEN

THE MINERALS MANAGEMENT SERVICE,

THE STATE OF CALIFORNIA,

AND

PLAINS EXPLORATION & PRODUCTION COMPANY

TABLE OF CONTENTS

MEASUREMENT AND ALLOCATION PLAN
POINT PEDERNALES UNIT, TRANQUILLON RIDGE UNIT AND CALIFORNIA STATE LANDS TRANQUILLON RIDGE AREA

			Page
Section 1	Introduction		1
Section 2	Oil Metering		1
Section 3	Gas Metering		6
Section 4	Charts		10
	4.1	Metering Block Flow Diagram	10
		Gas Plant Balance	11
		Computational Block Definitions	12
		Computational Block for Pipeline Blowdown	13
		Gas Plant Balance Computation	14
	4.2	Meter Calibration Frequency Table	15
	4.3	Annual Calibration Schedule	16
		Quarterly Coefficients Table	17
	4.4	Chromatography Frequency	20
	4.5	FMP Legal Locations & Meter Counts	21
	4.6	Basic Meter Data	22
	4.7	Meter Provers	23
	4.8	LOGP Location Plat	24
	4.9	Meter & Tank Status	25
	4.10	LOGP Plant Statement	26
	4.11	Gas Allocation Methodology	29
	4.12	Gas Injection Imbalance Statement	30
	4.13	Royalty Basis	31
	4.14	Oil Allocation Methodology	32
Section 5	BP-Mix Sales Measurement Methodology		34
Section 6	Sulfur Measurement Methodology		34
Exhibits			
	A.	Month End Well Production Report	E-1
	B.	Well Test history Report	E-3
	C.	Condensate – Meter 2469	E-5
	E.	LACT Tickets	E-6
	F.	Thirty-One Day Gauge and Production Report	E-10

WITNESSETH:

WHEREAS, Platform Irene is situated in the outer continental shelf on OCS – P 0441,

WHEREAS, Oil and gas production began at Platform Irene from the federal Point Pedernales Unit (hereinafter "Pt Ped Unit") in 1987,

WHEREAS, Well A-28 was drilled from Platform Irene into the a new area called the Tranquillon Ridge field, and the federal Tranquillon Ridge Unit (hereinafter "T-Ridge Unit") was created in 1997 to provide for the production of oil and gas from this new area,

WHEREAS, A Measurement and Allocation plan was generated by the operator and approved by the Minerals Management Service to account for the production from these two units from Platform Irene,

WHEREAS, The development and production of oil and gas reserves related to the state tidelands from the California State Lands Tranquillon Ridge Area (hereinafter "Tidelands") will be conducted from Platform Irene. This Tidelands development fits within the existing framework of the facility infrastructure at Platform Irene and the Lompoc Oil and Gas Plant (hereinafter "LOGP").

WHEREAS, The parties now wish to generate a revised measurement and allocation procedure to account for the development of the Tidelands,

WHEREAS, Upon production of oil and gas from the Tidelands, this Memorandum of Agreement ("hereinafter "MOA") will supersede the previous Measurement and Allocation Plan,

NOW THEREFORE, in consideration of the premises and promises contained herein, the California State Lands Commission; Minerals Management Service, and Plains Exploration & Production Company do hereby agree as follows:

I. PARTIES

This MOA is entered into effective the date provided below by and among the Minerals Management Service, the California State Lands Commission, and Plains Exploration & Production Company.

II. PURPOSE OF THE AGREEMENT

This MOA has been generated in order to comply with the requirements of 30 CFR, Part 250.1100 & 250.1200, for Pt Ped Unit and T-Ridge Unit along with California Public Resources Code, Division 6 for Tidelands. It has been developed to replace that certain Measurement and Allocation Plan that covered only the federal T-Ridge Unit and Pt Ped Unit prior to the expansion into the Tidelands.

III. DEFINITIONS

"Condensate" - Any liquid hydrocarbon recovered from the vessels at the inlet to the LOGP and metered through meter 2469.

"BP-Mix" or "LPG" A mixture of propanes and butanes extracted in the gas processing unit at LOGP and delivered for sale via the truck loading rack for BP-Mix,

"Natural Gasoline" or "Gasoline" – Liquid hydrocarbons typically in the range of pentane and heavier recovered during processing of the gas stream at LOGP and delivered to the truck loading racks for natural gasoline or metered through meter 2468,

"Natural Gas Liquids" – Liquid hydrocarbons typically in the range of propane and heavier recovered during processing of the gas stream at LOGP and delivered to the truck loading racks for either Natural Gasoline or BP Mix or metered through 2468

"Pt Ped" – The lands, wells and hydrocarbons collectively associated with the Pt Ped Unit and the T-Ridge Unit.

"Theoretical Tidelands Oil Production" or "Theo Tidelands" - The sum of the Tidelands meter readings multiplied by the Tidelands oil cut determined by the Tidelands OWD probe and corrected for temperature.

"Theoretical Pt Ped Oil Production" or "Theo Pt Ped"- The sum of the Pt Ped meter readings multiplied by the Pt Ped oil cut determined by the Pt Ped OWD probe and corrected for temperature. This includes volumes from both Pt Ped Unit and T-Ridge Unit.

"Theoretical Platform Irene Total Oil production" or "Theo Irene" - The sum of the Theoretical Tidelands Oil Production and the Theoretical Pt Ped Oil Production.

"Theoretical Tidelands Gas" All Tidelands gas separated on Platform Irene, as adjusted which is metered with FE-200.

"Theoretical Pt Ped Gas" All Pt Ped gas separated on Platform Irene, which is metered with FE-221. This includes volumes from both Pt Ped Unit and T-Ridge Unit.

IV. AGREEMENT

1.0 INTRODUCTION

Oil and gas production shall be prorated under a two tiered allocation. The first tier being an allocation to Tidelands and Pt Ped. The second tier being from the Tidelands or Pt Ped to their respective wells. Each allocation is more fully described below.

2.0 OIL METERING

2.1 PROCESS DESCRIPTION

Chart 4.1 in Section 4 is a block flow diagram showing the overall gas and liquid flows for Platform Irene and LOGP. The gas which is not in solution in the oil is separated from the oil on Platform Irene. The oil produced from the Tidelands wells will be segregated from the oil produced from the existing Pt Ped production and metered by turbine meters and adjusted for sediments and water (hereinafter "S&W") on Platform Irene. Gravity samples will also be taken before commingling so that each area can receive the corresponding price adjustment for the purchaser's gravity scale. Initially, two of the test separators will be dedicated to the Tidelands wells. One of the test separators will be used as a gross separator. Once the production exceeds the capacity of the test separator which is being used as a gross separator, excess volume will be delivered to the three phase separator dedicated to the Tidelands wells.

All Tidelands oil produced will be combined before entering a three phase separator then metered (FT-250 & FT-251) separately and adjusted for temperature and S&W (TA-250 & OWD-250) before being commingled with Pt Ped production.

The Pt Ped production will also be delivered through a three phase separator. Oil produced will be combined before entering a three phase separator then metered (FT-220 & FT-221) and adjusted for temperature and S&W (TA-220 & OWD-220) before being commingled with the Tidelands production. The oil production is then discharged into the shipping tank that moves through a common pipeline which ships the oil

emulsion to the onshore LOGP facility. Once the oil emulsion is onshore, the oil is separated from remaining water and any gas which also evolves from the process is recovered via the vapor recovery system.

Gasoline and condensate extracted from the process stream at LOGP are metered as they leave LOGP and may be blended with the dry oil prior to entering Lease Automatic Custody Transfer unit (hereinafter "LACT") A and/or B (meters 556 and 557 respectively). The dry oil plus these additions is metered through LACT A and/or B at LOGP prior to entering the ConocoPhillips pipeline system. Oil may also be sent to storage on a limited basis.

The actual Pt. Ped and Tidelands oil production is determined by allocating the total monthly shipments from LACT A and/or B at LOGP less blended condensate (meter **2469**) and blended natural gasoline (meter **2468**) and adjusted for changes in inventory (plus ending inventory, minus beginning inventory as described in 1.2.C below) back to the two production areas based on the theoretical net oil volumes from Platform Irene.

Once the Pt. Ped and Tidelands share of the actual oil is determined, the production will then be allocated to each well based on well test data as described below. Generally, every well is tested at least twice per month for a period of 24 hours. When a well is not in test, the fluid flows through a gross separator, one designated for Pt Ped production and one designated for Tidelands production. The individual theoretical well production is determined by multiplying the applicable well test production rate per day by the corresponding days the individual well was open to production [well test production rate x days on production = individual well theoretical production]. The total Tidelands or Pt Ped actual oil production will be prorated to the producing wells by multiplying the total Tidelands or Pt Ped production by the result of dividing the individual well theoretical production by sum of all theoretical well production from the corresponding area which equals the actual individual well production [total Tidelands or Pt Ped production x (individual well theoretical production / sum of all area theoretical well production) = actual individual well production].

2.2 METERING

Oil metering and allocation of production described by the following (Well A-23 is used for sample calculations) is to demonstrate the well level allocation of the volume from Section 2.1. Calculation differences between the formulas below and Exhibit A are due to rounding.

A. OIL/CONDENSATE ALLOCATION BY COMPLETION REPORT

Exhibit "A" is the allocation report which depicts each well's proportionate share of production/sales based on the metering and allocation method described herein for oil and condensate.

B. METERING METHOD

1. Oil Sales – Column 5 Exhibit A

Oil Sales is measured by LOGP LACT meters (Exhibit E). Commingled in the LACT meters is condensate blended through meter **2469** (Exhibit C) and natural gasoline blended through meter **2468** (Exhibit D). Condensate is deducted from LACT sales and shown as Condensate on Exhibit A (Row 8). Natural gasoline is deducted from LACT sales and processed on the LOGP Facility Report with the Natural Gas Liquids.

2. Condensate – Meter **2469**, Exhibit C

Corresponds to "PRODUCTION VOLUME" column 4 of Exhibit A – "PRODUCT TOTALS" as noted on page 2, Row 8 for each well.

3. Blended Natural Gasoline - Meter **2468**, Exhibit D

Corresponds to Column 13 of Chart 4.10, LOGP Gas Plant Statement. Included here only as information since the metered volume is used to adjust the LACT for actual oil sales.

4. Beginning Inventory – Column 3 Exhibit A

Ending Inventory includes tank storage and pipeline fill from prior month, similar to Exhibit F.

5. Ending Inventory – Column 6 Exhibit A

Ending Inventory includes tank storage and pipeline fill (Exhibit F).

C. ALLOCATION METHOD – SEE EXHIBIT A

1. "WELL THEORETICAL" production – Column 7

Theoretical production is based on a series of well tests conducted for each well (Exhibit B) multiplied by the corresponding producing days (Exhibit A - Column 2) to determine each wells theoretical production by product.

2. "BEGINNING INVENTORY" – Column 3

Beginning inventory equals previous month's ending inventory.

3. "PRODUCTION VOLUME" calculation – Column 4

Total facility ending inventory plus total facility oil sales minus total facility beginning inventory equals total facility production which is then allocated to the Tidelands and Pt Ped in accordance with Section 1.1.

Ending + Sales – Beginning = Total Facility Production

Oil 7801.30 + 248727.50 – 20350.02 = 236178.78

Condensate 0.00 + 2224.00 – 0.00 = 2224.00

4. Allocation of Total Production to Production Areas

The Total Facility Production from Step 3 is multiplied by the result of dividing the Theoretical Tidelands Oil Production and/or Theoretical Pt Ped Oil Production equals the individual Production Area actual production (i.e. tier 1 allocation).

Total Prod X (Theo Pt Ped / Theo Irene) = Pt Ped Prod Vol

236178.78 X (215114.25/ 215114.25) = 236178.78

Total Prod X (Theo Tidelands / Theo Irene) = Tidelands Prod Vol

236178.78 X (0.00 / 215114.25) = 0.00

5. Allocation of Individual Well Actual Production – Column 4

Total Tidelands or Pt Ped production from Step 4 multiplied by the result of dividing the individual well theoretical production by the sum of all theoretical well production from the corresponding area equals the individual well actual production (i.e. tier 2 allocation). (Data for A-23 used as an example)

Pt Ped Prod Vol X (Theo Well / Theo Pt Ped Prod) = Well Prod

236178.78 X (23870.36 / 215114.25) = 26205.49

6. Allocation of Other (Condensate) – Row 8

Condensate is allocated based on theoretical gas production. Total facility Condensate multiplied by the result of dividing the individual well theoretical gas production by the sum of all theoretical well gas production equals individual well Condensate. (data for A-23 used as an example)

Total Cond X (Theo Well Gas / Theo Gas) = Well Cond

2224 X (12592.75 / 210541.16) = 133.02

7. Individual Well Oil/Condensate Sales Calculation –Column 7

Total facility oil sales less beginning inventory, prorated to each well based on current month well oil production from above, divided by total facility oil production for the month plus beginning well inventory (if any). (data for A-23 used as an example)

(Total Facility Oil Sales–Beg Inv)X(Well Oil Prod / Total Fac Oil Prod)=Sub-Total

Oil (248727.50-20350.02)X(26205.46/236178.78)=25339.79

Sub-Total + Beg Inv = Well Oil Sales

Oil 25339.79 + 2293.10 = 27632.89

(Total Fac Cond Sales–Beg Inv)X(Well Cond Prod/Total Fac Cond Prod)=Well Sales

Condensate (2224.00 - 0.00) X (133.02 / 2224.00) = 133.02

8. Ending Inventory Calculation – Column 8

Beginning oil inventory plus oil production minus oil sales equals ending inventory. (data for A-23 used as an example)

Beg Inv + Oil Prod – Oil Sales = End Inv

2293.10 + 26205.46 – 27632.89 = 865.67

9. Water Production – Row 9

Water production is a series of well tests for each well to determine well estimated water production.

10. Days Produced – Column 2

Days produced is determined by tracking the downtime of each well to arrive at the number of days the well is open for production.

3.0 GAS METERING

3.1 PROCESS DESCRIPTION

Chart 4.1 in Section 4 is a block flow diagram showing the overall gas and liquid flows for Platform Irene and the LOGP.

The oil and gas production is allocated for royalty purposes as the production is commingled from both Pt Ped and Tidelands offshore. Each of the respective gas streams for Pt Ped gas and Tidelands gas are kept separate and a gas analysis is taken of each before commingling for transporting to LOGP. The gas is analyzed using gas chromatography by a state certified lab to determine BTU content and natural gas liquid content for each source of gas delivered to LOGP. This is used to determine the theoretical MMBTU and theoretical natural gas liquid products used for allocation purposes. Theoretical Pt Ped Gas and Theoretical Tidelands Gas, are adjusted each month by the gas lift gas volume so as to reflect net theoretical gas production. Gas lift gas is assumed to be the first gas recovered from gas lift wells and is therefore deducted from the Theoretical Pt Ped Gas and Theoretical Tidelands Gas. Meters FE-101GL ("Pt Ped Gas Lift Gas") and FE-201GL ("Tidelands Gas Lift Gas") will meter the volume of gas sent into the respective areas of production and will be subtracted from Theoretical Pt Ped Gas and Theoretical Tidelands Gas, respectively. At LOGP, the crude oil is reheated, dewatered and shipped to ConocoPhillips Santa Maria Refinery. Gas released from the crude oil during processing at LOGP is captured in the vapor recovery system and combined (via meter **2452**) with gas from Platform Irene (via meter **2453**). This mixture passes through meter **2450** and mixes with gas from Lompoc Field (from meter **2675**) along with gas recovered from injection ((Purisima 73, meter 2451) before treatment in the gas processing unit.

The gas processing unit removes heavy hydrocarbons (C3+) and waste products (water, H_2S, and CO_2) from the gas to be sold. Treated gas is normally compressed and sold into the SOCAL Pipeline (via meter **5811**).

During maintenance shutdowns or whenever the sales gas is "off specification," the gas is injected into the Lompoc Field at Purisima well P-73 (via meter **2462**). Gas from Platform Irene that is injected onshore, is metered, allocated and royalties are paid on the volume injected based on the weighted average sales price per Mcf for the month of injection. Gas recovered from storage (via meter 2451) is non-royalty bearing since the royalty was paid as the gas was injected.

Natural Gas Liquids condense in the gas plant. Natural Gasoline is usually blended into the dry crude oil (via meter **2468**) using a metering pump as discussed in Section 2. The Natural Gasoline may also be sold by loading it onto tank trucks (via meter **2470**). This generally occurs during shut-downs of the refinery and/or the oil pipeline The Natural Gasoline produced can vary from 0 to 11,000 gallons per day ("gpd").

The BP-Mix that is removed from the gas stream at the gas processing unit is sold and transported by truck (via meter **2471**). BP-Mix production will vary from 0 to 18,000 gpd.

Each well that is produced by gas lift has an individual meter for the gas volume injected. The gas production from the test separator (when a well is in test), is adjusted for the gas injected volume to arrive at the well's theoretical produced gas. For wells that are produced using electric submersible pumps, the gas which is metered at the test separator is the theoretical produced gas for the well.

3.2 METERING

The LOGP Facility is equipped with meters for all major gas and liquid streams. Turbine, mass flow, diaphragm, rotary vane, and orifice meters are used, depending on the service. All natural gas liquid flows are measured by meters. The measurement methodology for BP-Mix sales is included in Section 5.

A list of meters and their calibration frequencies are shown in Chart 4.2 (see Section 4). Basic meter data is summarized in Chart 4.6.

3.3 CALIBRATION

The meters will be calibrated as indicated on Chart 4.2, with frequencies ranging between twice a month to annually. The MMS and State will be notified before calibration where indicated in Chart 4.2. The MMS and State shall also be notified concerning the calibration of the SOCAL meter. A yearly calibration schedule is shown on Chart 4.3.

3.4 ANALYSES

The process stream analytical schedule is given in Chart 4.4. Notifications are to be made according to the information shown in this chart.

3.5 ALLOCATION

Allocations are calculated using the attached spreadsheet, Chart 4.10. Calculation methodology is explained on Chart 4.11. The Gas Injection Imbalance Statement is included herewith as Chart 4.12. Tidelands and Pt Ped royalty allocation basis is outlined on Chart 4.13.

3.6 FLARE GAS

Gas sent to flare on Platform Irene will be identified as to the source (ie: Tidelands, Pt Ped, Combined) and reported on the Daily Report. Gas from a vessel or well prior to FE-221 will be reported as Pt Ped gas, gas prior to FE-200 will be reported as Tidelands gas, and gas flared after FE-221 and FE-200 will be reported as Combined flare. Combined flare gas will be allocated in the same manner as sold gas, prorated based on FE-221 and FE-200. The Daily Report volumes will be summarized each month for allocation and reporting.

3.7 GAS LIFT GAS

Gas used for gas lift will be metered before injection via meters FE-101GL ("Pt Ped Gas Lift Gas") and FE-201GL ("Tidelands Gas Lift Gas"). This gas will be recovered at the separators on Platform Irene. Gas Lift Gas is treated as a closed loop and assumed to be the first gas recovered from wells on

Gas Lift. Metered volumes at FE-221 and FE-200 are adjusted for Gas Lift volumes along with gas metered during well test of wells on Gas Lift.

3.8 IRENE GAS INJECTION

Gas injected at platform Irene will be allocated in the same manner as gas sold, prorated based on FE-221 and FE-200. No royalty will be calculated on Pt Ped gas that is injected since it still remains within the boundaries of Pt Ped except as noted below. Royalty will be calculated only on Tidelands gas that is injected at Irene. Gas injection at platform Irene is typically for operational upset conditions. The operator will notify the MMS District Office when gas is injected similar to the flare notice. Should it be necessary to inject on a more frequent basis the operator will contact the MMS to obtain a Gas Storage Agreement and royalties will be paid to the MMS on gas injected under the Gas Storage Agreement.

4.0 CHARTS

LOGP - Gas Plant Balance

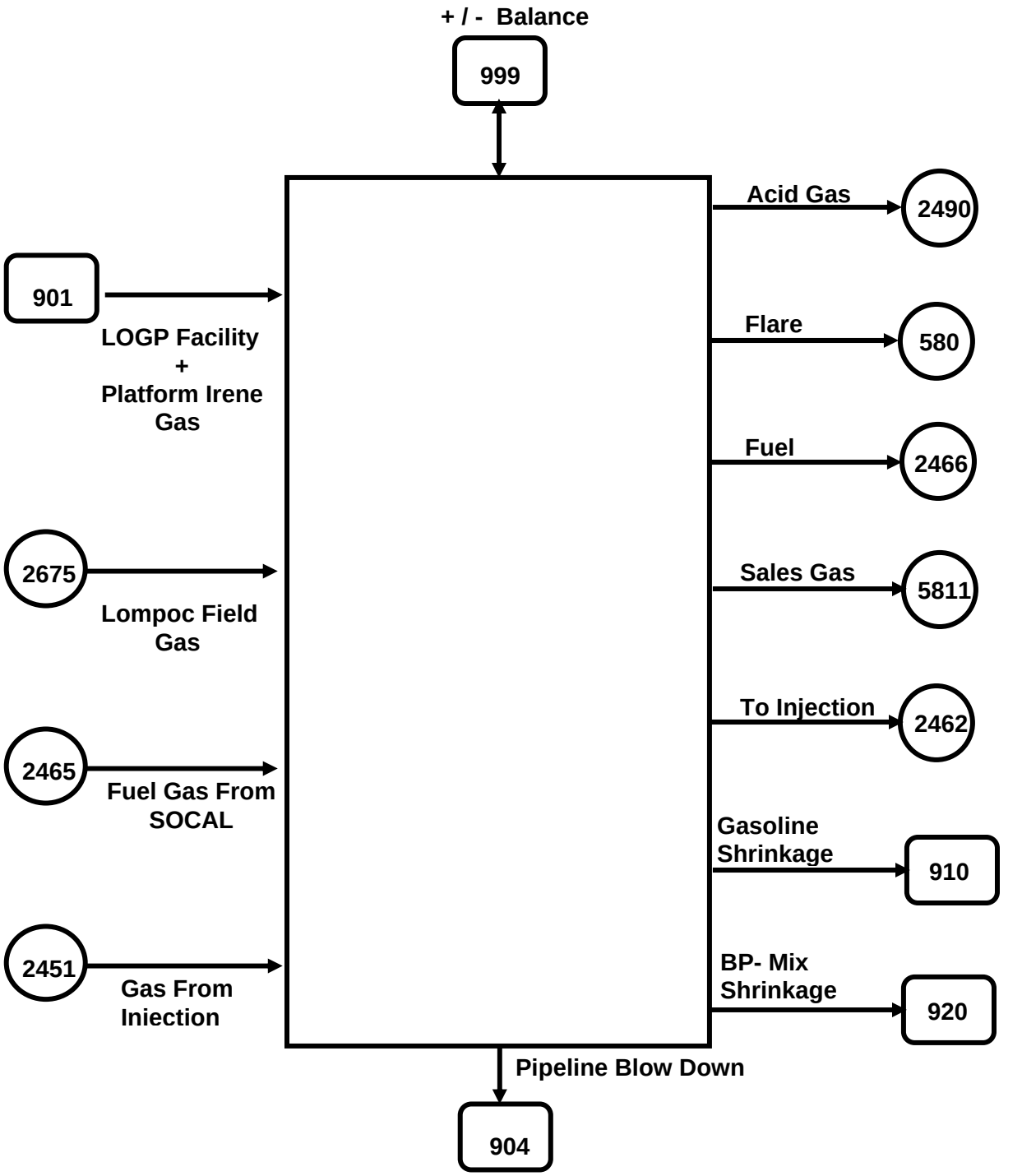

Actual Meters

9## Computational Blocks
(please refer to computational block definitions)

Computational Block Definitions:

1. **Computational Block** **901** — **Irene + Facility Gas Computation:**
   M #901 = M #2450 + M #2464 - M #4292 - M #4200

2. **Computational Block** **902** — **Total Combined Inlet Gas Computation:**
   M #902 = M #901 + M #2675 + M #2451

3. **Computational Block** **903** — **Total Combined Fuel Gas Computation:**
   M # 903 = M # 2466 + M # 2465

4. **Computational Block** **904** — **Pipeline Blow down Computation:**
   M # 904 = Computed from table B – 1.

5. **Computational Block** **910** — **Gasoline Shrinkage Computation:**
   M # 910 = (M # 2470 + M # 2468 + Storage Inventory difference) X (Flash volume)

   - Flash volume is determined by chromatograph in cu. ft. / gal.
   - M # 910 results are computed in Mcf.

6. **Computational Block** **920** — **BP-Mix Shrinkage Computation:**
   M # 920 = (M # 2471 + Storage Inventory difference) X (Flash volume)

   - Flash volume is determined by chromatograph in cu. ft. / gal.
   - M # 920 results are computed in Mcf.

7. **Computational Block** **999** — **Gas Plant Balance Computation:**
   Plant Outlets are subtracted from Plant Inlets as follows:
   M # 999 = (M # 901 + M # 2675 + M # 2451) - (M # 2490 + M # 580 + M # 2466 + M # 5811 + M # 2462 + M # 910 + M # 920)

Imbalance causes and consequences

There are many causes of gas plant imbalances. Some of these include:

1. **Orifice meter accuracy problems which have an inaccuracy of +/- 1% per pen.**
2. **Inventory gauging problems.**
3. **Unmeasured BP-Mix recycled Truck vapor returns.**
4. **Unmeasured recycled Gas Plant vapors.**
5. **Water shrinkage.**

If gas plant imbalance exceeds 10%, meter calibration frequency should be increased.

904 Computational Block 904: Pipeline Blowdown

If off spec gas enters the sales gas pipeline, the line must be blown down. The blow down volume is determined by the following table. Table values are computed from the relationship: $P_1V_1 = P_2V_2$, and the pipeline dimensions of 7.39 miles of 12" pipe.

Table B – 1.

Pipeline Pressure (PSIG)	Pipeline Capacity (MSCFD)
900	1907.18
875	1855.05
850	1802.93
825	1750.80
800	1698.68
775	1646.55
750	1594.43
725	1542.30
700	1490.17
675	1438.05
650	1385.92
625	1333.80
600	1281.67
575	1229.54
550	1177.42
525	1125.29
500	1073.17
475	1021.04
450	968.92
425	916.79
400	864.66
375	812.54
350	760.41
325	708.29
300	656.16
275	604.03
250	551.91
225	499.78
200	447.66
175	395.53
150	343.41
125	291.28
100	239.15
75	187.03
50	134.90
25	82.78
0	30.65

Locate the initial and final pressures in the table at the left. Subtract the final volume from the initial volume to find the blow down volume.

<u>Example</u>:

Initial Pressure = 700 psig
Final Pressure = 25 psig

(1490.17 – 82.78) = 1407.39
@700 psig @ 25 psig

NOT PART OF DOCUMENT

Note:

For **page 10 A-D** see Chart 4.1 Metering Flow Diagram under separate PDF file from Autocad.

NOT PART OF DOCUMENT

Note:

For **page 14** see 'Gas Plant Balance Computation' saved under separate file.

For **page 15** see Chart 4.2 Meter Calibration Frequency Table under separate file.

For **page 16** see Chart 4.3 Annual Schedule under separate file.

For **page 17** see 'Gas Gravity & Coefficient Update Chart' saved under separate file.

All above pages contained in file:

- Pt. Ped & LOGP Metering Plan Charts (excel file)

Blank for formatting

Blank for formatting

BLANK SCHEDULE FORMS

Included herein are 8½-by-11 blank meter calibration schedule originals.

NOT PART OF DOCUMENT
4-21-05

Note:

For **page 19** see Chart 4.3 Annual Schedule (blanks) under separate file.

File name is:

- Pt. Ped & LOGP Metering Plan Charts (excel file)

CHART 4.4

CHROMATOGRAPHY FREQUENCY

SAMPLE POINT	PERIOD
Lompoc Compressor Suction	Quarterly
Tidelands Sales Gas at Irene	Quarterly (1)
Pt Ped Sales Gas at Irene	Quarterly (1)
meter 2450	Monthly
meter 2451	Monthly
meter 2452	Monthly
meter 2453	Monthly
meter 2461	Monthly
meter 2462	Monthly
meter 2468	Monthly
meter 2675	Monthly
meter A28-1	Monthly
meter A28-2	Monthly

(1) Sample monthly during initial start-up of Tidelands

NOT PART OF DOCUMENT
4-21-05

Note:

For **page 21** see Chart 4.5 FMP Legal Locations & Meter Counts under separate file.

For **page 22** see Chart 4.6 Basic Meter Data under separate file.

All above pages contained in file:

- Pt. Ped & LOGP Metering Plan Charts (excel file)

Blank for formatting

4.7 METER PROVERS

Meter proving is currently done by either Century Calibrating Company or Calib/Tech. Basic data on the prover instruments used by these contractors is available for review at PXP's Orcutt office during normal business hours.

NOT PART OF DOCUMENT
4-21-05

Note:

For **page 24** see Chart 4.8 Location Plat under separate file. LOGP Meter Locations.pdf

For **page 25** see Chart 4.9 Meter & Tank Status under separate file.

For **pages 26 - 31** see Chart 4.10 LOGP – Gas Plant Statement under separate file.

For **page 32** see Chart 4.11 Allocation Methodology under separate file.

For **page 33** see Chart 4.12 LOGP – Gas Plant Gas Injection Imbalance Statement under separate file.

For **page 34** see Chart 4.13 under separate file.

All above pages (except page 23) contained in file:

- Pt. Ped & LOGP Metering Plan Charts (excel file)

4.14 Oil Allocation Methodology & Basic Royalty Valuation

1. Pt Ped and Tidelands Oil Production Calculation
    a. Gross Oil Sales to Tidelands & Pt Ped areas: volume from FT-220 and FT-221 for Pt Ped; volume from FT-250 and FT-251 for Tidelands

       Times

    b. Oil percentage net of S&W from OWD-220 for Pt Ped; Oil percentage net of S&W from OWD-250 for Tidelands

       Adjusted for

    c. Temperature correction factor: TA-220 for Pt Ped; TA-250 for Tidelands

       Equals

    d. Theoretical Tidelands Oil Production volume for Tidelands and Theoretical Pt Ped Oil Production for Pt Ped areas: FT-220 and FT-221 adjusted for PT PED; FT-250 and FT-251adjusted for Tidelands

2. Net Oil Sales Calculation
    a. Current monthly LACT sales: Sum of LACT A&B adjusted for temperature, gravity and S&W to arrive at Net Total Sales volume

       Minus

    b. Current blended gasoline {C5+} sales: Meter 2468

       Minus

    c. Current blended Condensate sales: Meter 2469

       Equals

    d. Net Oil Sales volume

3. Total Oil Production
    a. Ending Inventory (Exhibit F)

       Minus

    b. Beginning Inventory (Exhibit F)

       Plus

    c. Net Oil Sales (from 2.d. above)

       Equals

    d. Total Oil Production

       Prorated based on

e. Theoretical Tidelands Oil Production and Theoretical Pt Ped Oil Production (from 1.d. above) plus any other metered oil delivers (net of S&W and adjusted for temperature)

Equals

f. Actual Oil Production for each area, respectively

4. Oil Sales: calculated on First-in-First-out basis (Beginning Inventory for all areas is deemed to be sold first)

a. Net Oil Sales volume

Minus

b. Beginning Inventory for each area respectively

Equals

c. Oil Sales from Production

Prorated based on

d. Oil Production from each area, respectively (3.f.)

Equals

e. Current Produced Oil Sold for each area, respectively

Plus

f. Beginning Inventory for each area, respectively

Equals

g. Total Current Month Sales for each area, respectively

Times

h. Current month sales price adjusted for oil gravity prior to C5+ blending

Equals

i. Current month Oil Sales Value for each area, respectively

Times

j. The royalty interest for each area, respectively

Equals

k. Current month Oil Royalty Value for each area, respectively

5.0 BP-MIX SALES MEASUREMENT METHODOLOGY

TRUCK SHIPMENT OF BP-MIX

Trucks are loaded through a Daniel Instruments hydrocarbon liquid loading system (hereinafter "Danload System"). This system measures the volume of the liquid loaded in the truck and records the volume in gallons. The DanLoad System is temperature corrected. Meters **2470** and **2471** are used as inputs to the DanLoad System.

6.0 SULFUR MEASUREMENT METHODOLOGY

TRUCK SHIPMENT OF SULFUR

The sulfur produced from the gas plant is a waste product of very low quality. Of the total volume shipped, 80% is solids and 20% is water. Of the 80% solids, 80% is sulfur and the rest is other impurities. The solids/water cake is sold on a weight basis. The Trucks are weighed at State of California Certified public scales and the payment is based on the difference between truck weight empty and truck weight full. The value received for sulfur sales is significantly less than the costs to recover and deliver due to the low quality. The value received is recorded as a credit to processing expense since the removal and transportation costs are greater than the value due to the sulfur's low quality.

IN WITNESS WHEREOF, The State of California, State Lands Commission; the Department of the Interior, Minerals Management Service; and Plains Exploration & Production Company have caused this MOA to be executed as of the dates set forth next to their respective signatures below, but effective for all purposes on the date of production of oil and gas from state Tidelands.

By: _____ Date: _____

Title: _____

(State of California)

By: _____Date:_____

Title: _____

(Minerals Management Service)

By: _____Date: _____

Title: _____

(Plains Exploration & Production Company)