MINUTE ITEM
This Calendar Item No. C33 was approved as Minute Item No. 33 by the California State Lands Commission by a vote of 3 to 0 at its 9-3-99 meeting.

CALENDAR ITEM
C33

A 67

S 35

PRC 3247.9

09/03/99
WP 3247.9
J. Smith

RECREATIONAL PIER LEASE

APPLICANT:

Joel A. Cooper and Irene Cooper
3522 Gilbert Drive
Huntington Beach, California 92649

AREA, LAND TYPE, AND LOCATION:

Sovereign lands in Huntington Harbour, near Huntington Beach, Orange County.

AUTHORIZED USE:

Continued use and maintenance of an existing boat dock, as shown on Exhibit A attached.

LEASE TERM:

Ten years, beginning June 22, 1999.

CONSIDERATION:

No monetary consideration pursuant to Public Resources Code section 6503.5.

SPECIFIC LEASE PROVISIONS:

Insurance:

Liability insurance in the amount of no less than $300,000.

OTHER PERTINENT INFORMATION:

1. Pursuant to the Commission's delegation of authority and the State CEQA Guidelines (Title 14, California Code of Regulations, section 15061), the staff has determined that this activity is exempt from the requirements of the CEQA as a categorically exempt project. The project is exempt under Class 1, Existing Facilities; Title 2, California Code of Regulations, section 2905 (a)(2).

Authority: Public Resources Code section 21084 and Title 14, California Code of Regulations, section 15300 and Title 2, California Code of Regulations, section 2905.

2. This activity involves lands identified as possessing significant environmental values pursuant to Public Resources Code sections 6370, et seq. Based upon the staff's consultation with the persons nominating such lands and through the CEQA review process, it is the staff's opinion that the project, as proposed, is consistent with its use classification.

EXHIBIT:

A. Location and Site Map

PERMIT STREAMLINING ACT DEADLINE:

N/A

RECOMMENDED ACTION:

IT IS RECOMMENDED THAT THE COMMISSION:

CEQA FINDING:

FIND THAT THE ACTIVITY IS EXEMPT FROM THE REQUIREMENTS OF THE CEQA PURSUANT TO TITLE 14, CALIFORNIA CODE OF REGULATIONS, SECTION 15061 AS A CATEGORICALLY EXEMPT PROJECT, CLASS 1, EXISTING FACILITIES; TITLE 2, CALIFORNIA CODE OF REGULATIONS, SECTION 2905 (a)(2).

SIGNIFICANT LANDS INVENTORY FINDING:

FIND THAT THIS ACTIVITY IS CONSISTENT WITH THE USE CLASSIFICATION DESIGNATED BY THE COMMISSION FOR THE LAND PURSUANT TO PUBLIC RESOURCES CODE SECTIONS 6370, ET SEQ.

AUTHORIZATION:

AUTHORIZE ISSUANCE TO JOEL A. COOPER AND IRENE COOPER, OF A TEN-YEAR RECREATIONAL PIER LEASE, BEGINNING JUNE 22, 1999, FOR CONTINUED USE AND MAINTENANCE OF AN EXISTING BOAT DOCK ON THE LAND SHOWN ON EXHIBIT A ATTACHED AND BY THIS REFERENCE MADE A PART HEREOF; NO MONETARY

CONSIDERATION PURSUANT TO PUBLIC RESOURCES CODE SECTION 6503.5; LIABILITY INSURANCE IN THE AMOUNT OF NO LESS THAN $300,000.

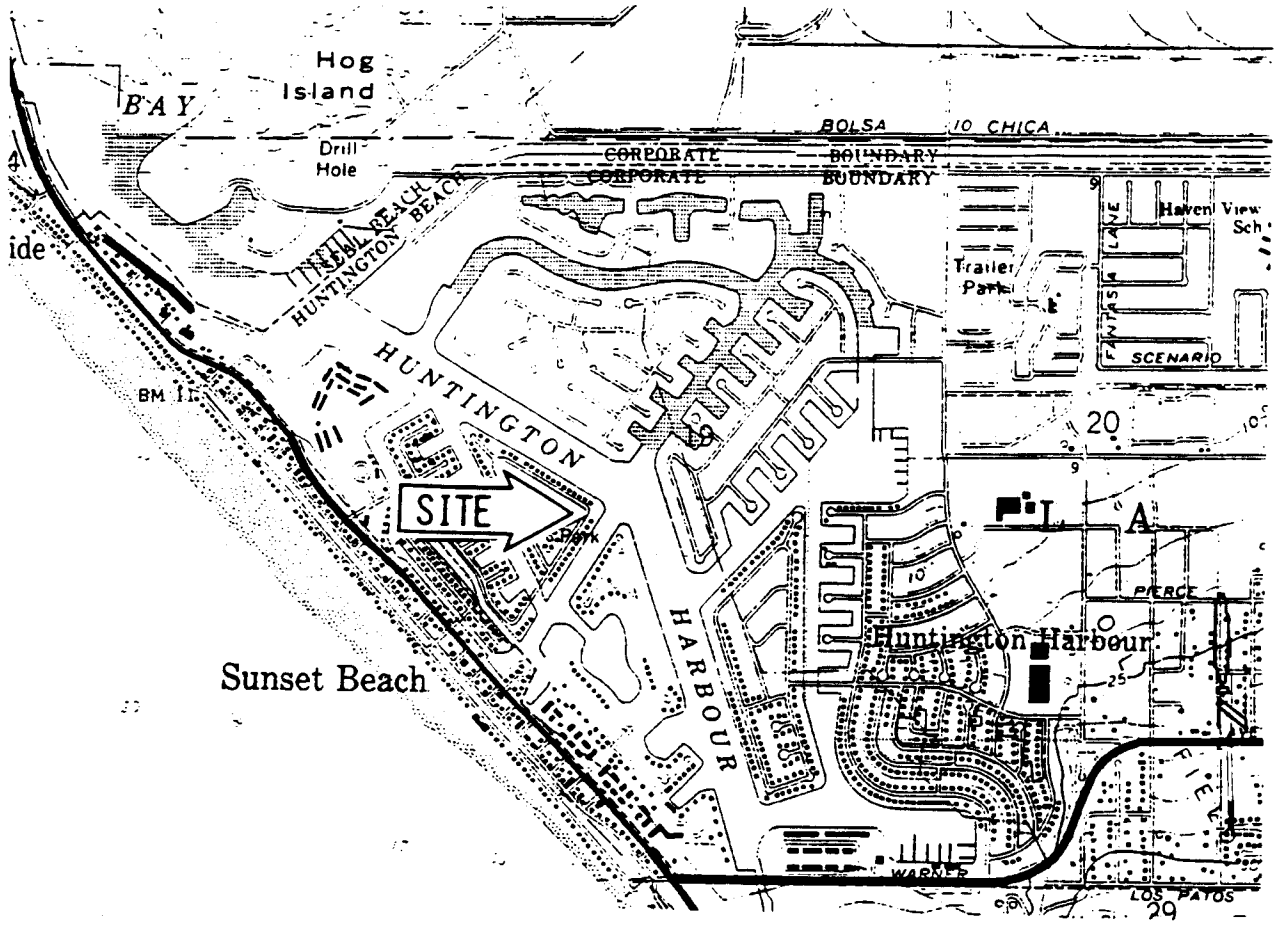

This Exhibit is solely for purposes of generally defining the lease premises and is not intended to be, nor shall it be construed as a waiver or limitation of any State interest in the subject or any other property.

APN 178-402-09
LOT 26 TRACT 4677

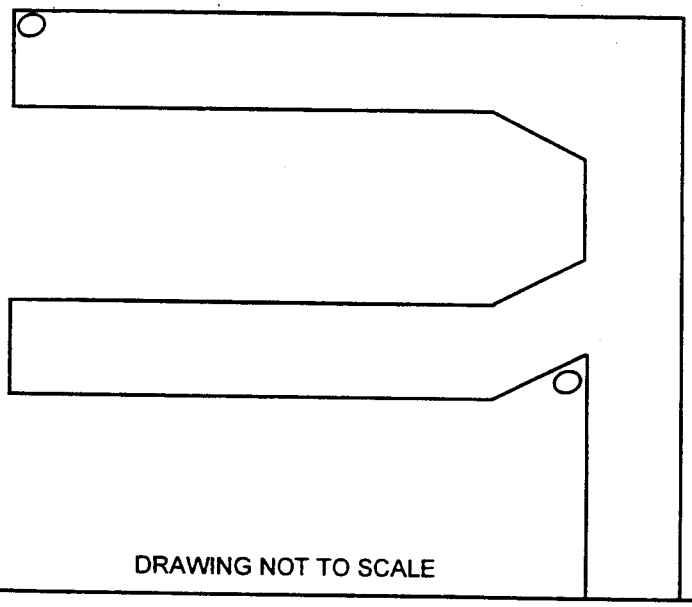

DRAWING NOT TO SCALE

EXHIBIT "A"
LOCATION MAP
WP 3247
3522 GILBERT DRIVE
HUNTINGTON BEACH
ORANGE COUNTY, CA.

CALENDAR PAGE 000216
MINUTE PAGE 00[illegible]